Builders hardware systems
Product book

since 1863

Glutz

Glutz Edition:
customised door handles for the new opera house in Oslo

Glutz
Swiss Access Systems

Glutz builders hardware stainless steel
Table of contents

Glutz competences	p. 5 - 17
Lever handles and knobs	p. 21 - 80
Roses and escutcheons	p. 84 - 129
Secaport security plates	p. 131 - 144
Metal frame hardware - Lever handles and knobs	p. 146 - 159
Metal frame hardware - Roses and escutcheons	p. 161 - 183
Metal frame hardware - security plates	p. 185 - 192
Window handles	p. 196 - 243
Pull handles	p. 245 - 251
Panic exit devices	p. 253 - 257
Bicolor - builders hardware	p. 259 - 263
Accessories and fixing templates	p. 265 - 266
Pictograms, standards, tender texts, indications to order	p. 268 - 289

Product overview

1. Glutz competences

1.1 Glutz easyfix® and bearing technologies

1.2 Glutz Edition

1.3 Metal casting

1.4 Ringdoor

1.5 Glutz Professional

1.1 Glutz bearing technology glide

Normal traffic

Glutz glide

Glutz glide high-performance glide bearings are designed to match the specifications of Glutz handle bearings. This polymer-based product is self-lubricating and designed for dry-running, which makes it absolutely maintenance-free.

Glutz glide is shock-resistant and demonstrates excellent damping qualities and high compressive strength.

Special: all Glutz bearing guidances can be combined with all the roses and cover plates in the Glutz metal frame range.

Glutz glide properties

- Suitable for use in fire protection
- For 16 mm matching handle
- Operating temperature from -40° to +140°
- Shock-resistant
- Excellent damping qualities
- High compressive strength

glide

glide
Inward rose

glide
Outward rose

glide
Outward rose, conical

glide
Inward rose in metal frame cover plate

glide
Inward rose

glide
Inward rose in metal frame rose

Glutz bearing technology
Needle bearings

Increased convenience

Glutz needle bearings

The compact design of Glutz needle bearings provides for a particularly slim and hence attractive handle bearing. The tempered chromium-nickel steel needles ensure minimum rolling resistance and allow for more comfortable use. This results in a particularly long service life.

Glutz needle bearings are maintenance-free and suitable for high traffic doors.

Glutz needle bearing properties

- Tempered needles in chromium-nickel steel (stainless)
- Suitable for use in fire protection
- High dimensional accuracy
- For 16 mm matching handle
- Low actuating force

Needle bearings

Needle bearings Inward rose | *Needle bearings Outward rose* | *Needle bearings Outward rose, conical*

Needle bearings Inward rose

Glutz bearing technologies twin needle bearings twin glide

High traffic

Glutz twin needle bearings

We recommend fitting two parallel Glutz needle bearings for high traffic doors. This combination meets the highest requirements in robustness, convenience and service life. Doors equipped with door closers as well as those at airports, railway stations and hospitals are subject to every day heavy duty use. Equipped with our twin needle bearings they can easily cope with this.

Additional advantages of twin needle bearings

- Maintenance-free
- Excellent moving properties
- Double needle bearing handle guidance

Glutz twin glide

Our twin glide bearings consist of two parallel Glutz glides: they are designed for extremely high traffic doors equipped with door closers, as well as for military or industrial buildings, schools, hospitals and nursing homes. The Glutz twin glide demonstrates the same characteristics as the Glutz glide, but the connection has even less play due to the handle guidance, which is twice as long.

Additional advantages of twin glide

- Maintenance-free
- Very heavy duty
- Double glide handle guidance

twin needle bearings

twin needle bearings Inward rose

twin needle bearings Half outward rose

twin needle bearings Inward rose

twin needle bearings Outward rose

twin needle bearings Outward rose, conical

twin glide

twin glide Inward rose

twin glide Half outward rose

twin glide Inward rose

twin glide Outward rose

twin glide Outward rose, conical

Glutz easyfix®
Innovative connection technology

For all building and apartment doors:

Metal frame- /full leaf doors

Some doors are subject to heavier duty use than others. This additional strain affects door handles in particular. Major axial and torsional forces act on door fittings, especially on heavy doors. This also applies if door closers are used.

Glutz easyfix® provides the perfect solution to this problem: the tensile stress is not just placed on the HESO screw, but on Glutz easyfix® as well. This novel system ensures an adjustable, low-play, but extremely durable connection between handle and rose or between handle and plate. The plug-and-snap connection developed by Glutz guarantees optimal solidity and pull resistance.

The innovation of Glutz easyfix® concerns the fact that the door fittings are no longer pre-assembled at the factory. This ensures perfect accessibility when attaching the base plate. The actual easyfix component is the cover plate or rose. You simply have to slide in the handle and the cleverly designed system fixes it in place automatically. Installation has never been easier.

Glutz easyfix® is suitable for all wooden, plastic and metal doors, can be combined with all cover plates, roses and protective fittings, and can be supplied with tried-and-tested Glutz bearing technologies.
By reducing the number of versions, handles and cover plates can be stored separately, which also reduces the storage and transport costs.

Assembling and dismantling on-site is child's play:

Assembling

1) Snap door handle and rose incl. Glutz easyfix®...

2) ...into place.

3) Snaps into place – easy and fix!

Dismantling

1) Push both wings apart with a pair of pliers and...

2) ...at the same time push slightly on the rose from behind and remove it from the bracket.

3) ...that's it!

Glutz easyfix®
On the safe side

Tested to EN 1906: 2002-05
(door handles and knobs)

Category of use 3	Galvanised steel spindle, fixed mobile
Classification	3 7 - 0* - 1 3 0 U
Category of use 4	Stainless steel spindle, fixed mobile
Classification	4 7 - 0* - 1 4 0 U

*Fire-resistance to EN 1906: 2002-05 is not a harmonised standard. Until harmonisation of EN 1906 with a potential CE marking takes place, inspection certificates to DIN 18273 remain essential for the suitability of fire and smoke protection doors in place of a fire-resistance classification. These inspection certificates have been obtained for the Professional Line.

Tested to EN 179
(emergency exit locks with handles or push plates in combination with various locks)

Further information on EN 179/EN 1125 is available at **www.glutz.com**

Glutz easyfix®
Perfectly combined advantages

Glutz bearing technologies combined with Glutz easyfix® to meet the highest requirements

glide

twin glide

needle bearing

twin needle bearing

- Glutz easyfix® can be supplied with all Glutz bearing technologies: Glutz glide®, Glutz twin glide®, Glutz needle bearings and Glutz twin needle bearings
- The door fittings are no longer pre-assembled at the factory, which guarantees perfect accessibility when attaching the base plate
- Glutz easyfix® is the quick and easy solution enabling the adjustable, durable installation of every Glutz stainless steel handle model on the construction site
- Glutz easyfix® reduces the number of versions, which helps to cut storage and transport costs considerably
- Certified for fire/smoke protection doors to DIN 18273: 1997-12

1.2 Glutz Edition

Exclusivity and design

Glutz Edition stands for exclusive design and quality combined with an unmatched individual service. Alongside high-quality products with an exclusive touch found in the details, Glutz can manufacture the fittings you create yourself, using the finest surfaces and much more. Glutz Edition can meet almost any requirement you can imagine in the area of fittings. No matter how unusual an order might be, Glutz Edition enjoys the challenge of making certain you are satisfied. Put us to the test! Glutz Edition includes:

- Limited-edition Glutz design lines
- Your own creations for a specific property
- Customer-specified exclusive finishes for Glutz fittings (surface refinement)
- Service for Glutz fittings

Glutz Edition:
Vicenza door handle – after inspiration comes creation

Glutz
Swiss Access Systems

1.3 Metal casting

Non-ferrous metal casting – values relived

The long-nurtured dream of conserving valuable cultural artefacts and artistic crafts became a reality in 2008 for Glutz with the incorporation of a foundry. Taking traditions and values into account, we are currently re-aligning the foundry towards the future, and will open it and the historical models housed there to the public in the not too distant future.

By engaging in quality non-ferrous metal casting, we clearly express our belief in traditional crafts with products for sophisticated tastes designed to adorn representative buildings and historical buildings under a preservation order. In the area of reproductions, we cast skilfully crafted objects in their original design: high-quality brass fittings, historical door knockers, stylish furniture fittings, elegant vintage car ornaments, artistic well casings and traditional bells. In the area of artistic castings, we create unique sculptures for celebrated artists such as Markus Raetz, Schang Hutter and Stefan Pauli. Their visions are moulded into form by the professional hands of our founders.

Whether there are private customers, architects, restorers or artists: together we artistically develop and mould your ideas using traditional, hand-crafted techniques – what is the better way of underlining the value of your objects?

Fittings

Appropriate brass fittings aesthetically and expressively underline the effect of doors and windows in historical buildings. Our exquisite fittings blend discreetly into the exiting architecture of the villas of innumerable celebrities and buildings under a preservation order, creating a very special atmosphere.

Furniture fittings

A piece of furniture is only transformed into a perfect unit once it has found its matching fittings. For furniture from the Baroque, Rococo and Classicism periods, it is essential that their effect and character is underlined by authentic fittings. Our collection of models regarding furniture fittings and interior design comprises countless examples from all style periods.

Louis XV commode from around 1750 by Mathäus Funk

Bells

We proudly follow in the footsteps of Alfred Kohler by producing classical Häuselmann and Eichelberger bells. Connoisseurs and collectors value their simple, elegant design, as well as their full, pure sound and individual motifs. Our bells are made of superior bell bronze and are produced according to the original 1876 formulas of Jakob Häuselmann. Being given the honour of incorporating these highly sought-after rarities into our company history is a great privilege for us.

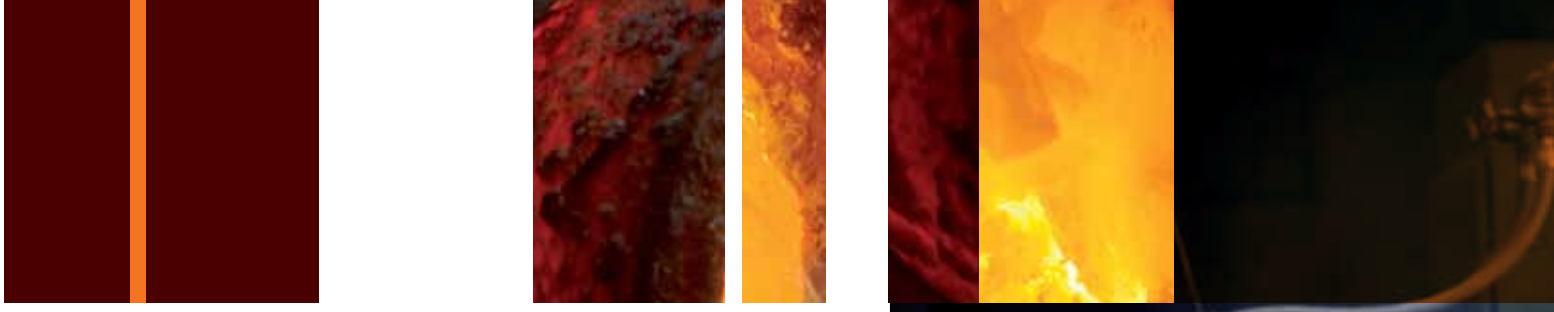

Restoration work

Whether historical buildings, monuments, steam ships, steam locomotives, churches, wells or vintage cars: our experienced professional founders will gladly advise you on all aspects of producing individual models for restoring your valuable arte-facts.

Well casings: Pfeiferbrunnen (piper fountain) in Berne

Works of art

We cast artworks using age-old craftsman's traditions, finished to the highest precision. Despite the deployment of state-of-the-art technologies, nothing essential has changed to this day in production processes for casting. In close cooperation with the artists, we make the desired mould based on their model. The skilled hands of our founders create a blank out of the molten metal, which is then transformed into an impressive sculpture through crafted perfection – cast for eternity!

'Yes or No' by Markus Raetz
© 2008, ProLitteris, Zurich

1.4 Ringdoor

Ringdoor:
Now you can design your own door handles and rotary window handles.

Each handle is constructed from individual rings which are available in different colours and materials. You choose the rings you want and their sequence, making every Ringdoor a personal design statement.

The fixed components for the door handle are manufactured by the company Glutz AG in Solothurn and are therefore compatible with all of the company's products. The Ringdoor product is not only commercially viable but also opens up new employment opportunities at the Aarau-Lenzburg Foundation for the Disabled, because each handle is individually assembled by the foundation. Ringdoor thus represents an interesting design project as well as an expression of social involvement.

The online configuration tool allows you to experiment with the possibilities offered by Ringdoor, and to place orders as well.

Ringdoor is only available via the Internet!
www.ringdoor.ch

1.5 Glutz Professional

Diversity of products in approved and tested high quality and functionality.
A comprehensive range for buildings of distinction

Glutz enables you to give your rooms a very special feel with its door and window handles. Our models made of rugged and durable stainless steel are available in a wide variety of shapes, colours and styles. Whether you prefer classical elegance, cool functionality or surprising originality: the consistency of design and high degree of user-friendliness make our models stand out from the crowd every time.

Exclusive finish for Glutz products to meet customer requirements

You‘d like to give your hardware a special finish or have them in a unique colour? Glutz Edition offers you all types of metal surfaces with colour and protective coatings

Surface treatment
Grinding and polishing (hand-polishing, ball polishing, trovalising)

Electroplating baths
Gold, silver, copper, brass, nickel, zinc

Cerium titanium coating
PVD coating (physical vapour deposition)
Purest quality titanium is vaporised by means of an electric arc. Through the addition of a small amount of nitrogen, metal parts are coated with a vapour deposit in different colours.

Powder coating
Unique surface structure and brilliant colour finish: satin or gloss in every imaginable colour (in accordance with the Glutz colour chart).

Product overview

2. Lever handles and knobs

2.1 Lever handle

5030 Vicenza I
p. 21

5033 Vicenza II
p. 22

5036 Vienna
p. 23

5037 Florence
p. 24

5038 Lugano
p. 25

5039 Lucerne
p. 26

5040 Mercury
p. 27

5046 Paris
p. 28

5050 Piraeus
p. 29

5051 Athens
p. 30

5052 Biel
p. 31

5053 Bruges
p. 32

5054 Uppsala
p. 33

5055 Malmö
p. 34

5056 Berlin
p. 35

5057 Thun
p. 36

5060 Zug
p. 37

5061 Jackson
p. 38

5062 New Orleans
p. 39

5064 Oslo
p. 40

5065 Rena
p. 41

5066 Savannah
p. 42

5068 Garbsen
p. 43

5069 Hannover
p. 44

5070 Berne
p. 45

5071 Memphis
p. 46

5073 Banks
p. 47

5076 Helena
p. 48

5080 Sapphire
p. 49

5083 Tulln
p. 50

5084 Baden
p. 51

5087 INOX Basle
p. 52

5088 Zurich
p. 53

5090 Emerald
p. 54

5092 München
p. 55

5093 George
p. 56

5094 Cape Town
p. 57

5096 Baar
p. 58

5098 Olten
p. 59

5099 Helsinki
p. 60

5130 Vicenza III
p. 61

5154 Stockholm
p. 62

5155 Turku
p. 63

5162 Stella
p. 64

5287 INOX Basle
p. 65

6012 Linz
p. 66

6016 Durban
p. 67

5715
p. 68

6030
p. 69

6031 Westridge
p. 70

2.2 Devices for residential application

50100
p. 71

51100
p. 72

52100
p. 73

2.3 Door knobs

5825
p. 74

5827
p. 75

5835 Sapphire
p. 76

5836
p. 77

5837
p. 78

5842
p. 79

5843
p. 80

2.1 Lever handle

Stainless steel lever handle
5030 Vicenza I

EN 1906
KL 3/4

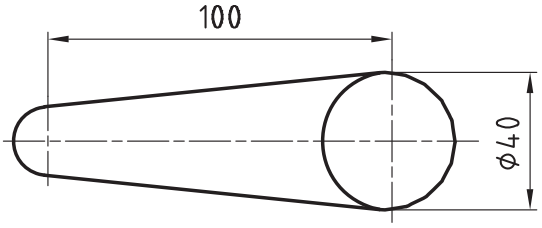

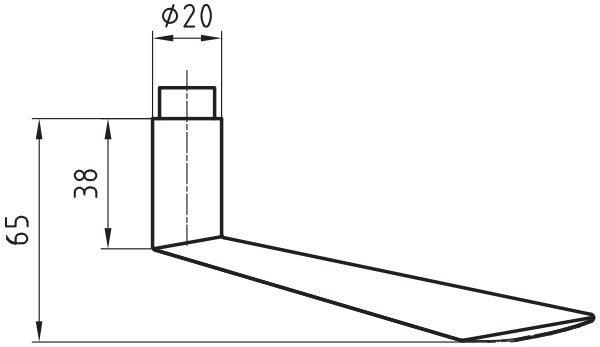

Product profile
Commercial buildings, administrative centres and superior quality residential developments

Standard version
- Lever handle length 130 mm, ø 20 mm
- Projection 65 mm
- Square spindle 8 mm
- Solid satin stainless steel
- 16 mm guide for Glutz glide / needle bearing (NL) / easyfix®
- Picture shows handle with 5620C rose

Options
- Polished stainless steel
- RAL lacquered
- PVD lacquered
- Square spindle 8,5 mm or 9 mm
- 16 mm guide for Glutz twin glide
- Category of use class 4, EN 1906: 2002-05

Quality standard
- Category of use class 3, EN 1906: 2002-05
- Tested for use in fire-rated and smoke protection doors to DIN 18273: 1997-12

5130
Stainless steel lever handle
p.61

5033
Stainless steel lever handle
p.22

5031/5616 CF
Stainless steel window handle
p.196

5032-280/5619K
Stainless steel handle PSK + HST
p.232

5843
Stainless steel door knob
p.80

2.1 Lever handle

Stainless steel lever handle
5033 Vicenza II

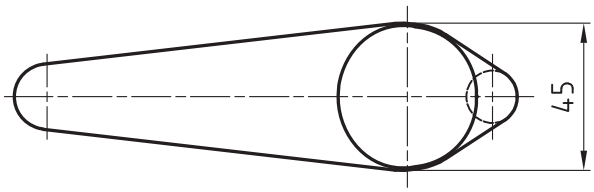

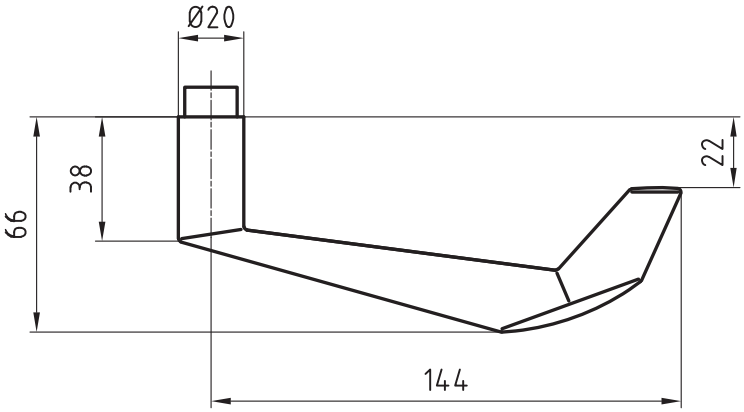

Product profile
Commercial buildings, administrative centres and superior quality residential developments

Standard version
- Lever handle length 154 mm, ø 20 mm
- Projection 65 mm
- Square spindle 8 mm
- Solid satin stainless steel
- 16 mm guide for Glutz glide / needle bearing (NL) / easyfix®
- Picture shows handle with 5620C rose

Options
- Polished stainless steel
- RAL lacquered
- PVD lacquered
- Square spindle 8,5 mm or 9 mm
- 16 mm guide for Glutz twin glide
- Category of use class 4, EN 1906: 2002-05

Quality standard
- Category of use class 3, EN 1906: 2002-05
- Tested for use in fire-rated and smoke protection doors to DIN 18273: 1997-12
- Admitted, combined with the appropriate lock as lever handle for emergency exits as per EN 179: 2002-06

5030
Stainless steel lever handle
p.21

5130
Stainless steel lever handle
p.61

5031/5616 CF
Stainless steel window handle
p.196

5032-280/5619K
Stainless steel handle PSK + HST
p.232

5843
Stainless steel door knob
p.80

2.1 Lever handle

Stainless steel lever handle
5036 Vienna

EN 1906
KL 3/4

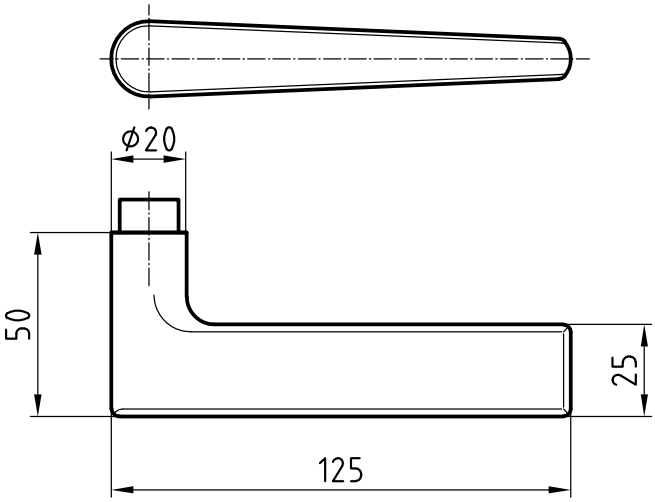

Product profile
Commercial buildings, administrative centres and superior quality residential developments

Standard version
- Lever handle length 125 mm, ø 20 mm
- Projection 50 mm
- Square spindle 8 mm
- Solid satin stainless steel
- 16 mm guide for Glutz glide / needle bearing (NL) / easyfix®
- Picture shows handle with 5620C rose

Options
- Polished stainless steel
- RAL lacquered
- PVD lacquered
- Square spindle 8,5 mm or 9 mm
- 16 mm guide for Glutz twin glide
- Version for narrow stile doors
- Category of use class 4, EN 1906: 2002-05

Quality standard
- Category of use class 3, EN 1906: 2002-05
- Tested for use in fire-rated and smoke protection doors to DIN 18273: 1997-12

5036/5616 CF
Stainless steel window handle
p.197

8500
Stainless steel window drive
p.241

5036-220/5619K
Stainless steel handle PSK + HST
p.233

2.1 Lever handle

Stainless steel lever handle
5037 Florence

EN 1906
KL 3/4

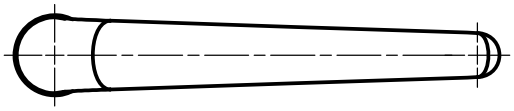

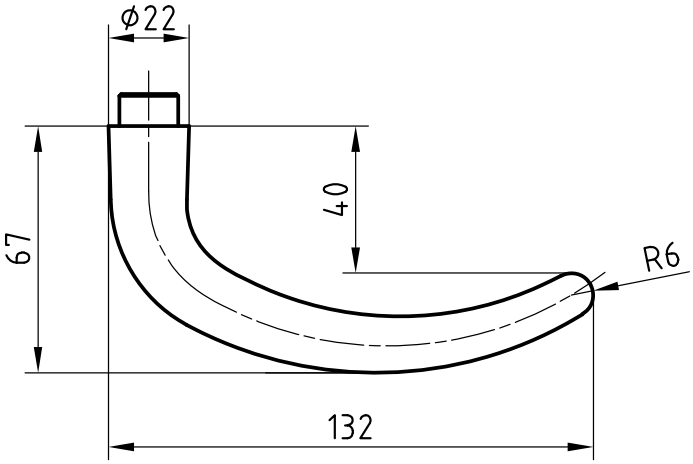

Product profile
Commercial buildings, administrative centres and superior quality residential developments

Standard version
- Lever handle length 132 mm, ø 22 mm
- Projection 67 mm
- Square spindle 8 mm
- Solid satin stainless steel
- 16 mm guide for Glutz glide / needle bearing (NL) / easyfix®
- Picture shows handle with 5620C rose

Options
- Polished stainless steel
- RAL lacquered
- PVD lacquered
- Square spindle 8,5 mm or 9 mm
- 16 mm guide for Glutz twin glide
- Version for narrow stile doors
- Category of use class 4, EN 1906: 2002-05

Quality standard
- Category of use class 3, EN 1906: 2002-05
- Tested for use in fire-rated and smoke protection doors to DIN 18273: 1997-12

5037/5616 CF
Stainless steel window handle
p.198

8500
Stainless steel window drive
p.241

2.1 Lever handle

Stainless steel lever handle
5038 Lugano

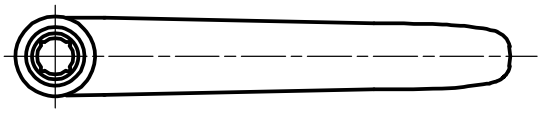

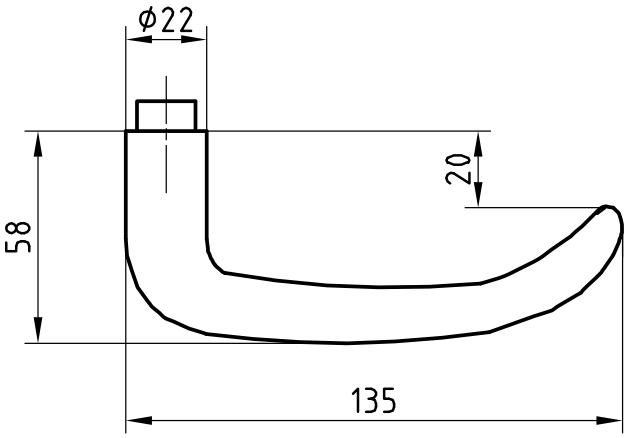

Product profile
Commercial buildings, administrative centres and superior quality residential developments

Standard version
- Lever handle length 135 mm, ø 22 mm
- Projection 58 mm
- Square spindle 8 mm
- Solid satin stainless steel
- 16 mm guide for Glutz glide / needle bearing (NL) / easyfix®
- Picture shows handle with 5620C rose

Options
- Polished stainless steel
- RAL lacquered
- PVD lacquered
- Square spindle 8,5 mm or 9 mm
- 16 mm guide for Glutz twin glide
- Version for narrow stile doors
- Category of use class 4, EN 1906: 2002-05

Quality standard
- Category of use class 3, EN 1906: 2002-05
- Tested for use in fire-rated and smoke protection doors to DIN 18273: 1997-12
- Admitted, combined with the appropriate lock as lever handle for emergency exits as per EN 179: 2002-06

5038/5616 CF
Stainless steel window handle
p.199

8500
Stainless steel window drive
p.241

2.1 Lever handle

Stainless steel lever handle
5039 Lucerne

EN 179

EN 1906
KL 3/4

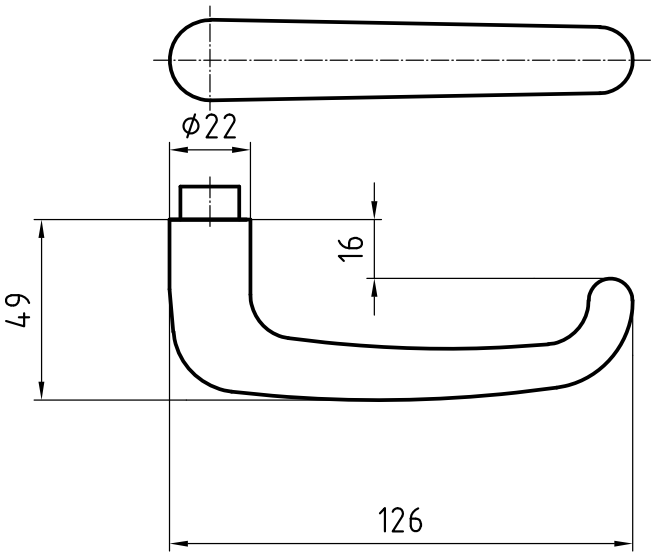

Product profile
Commercial buildings, administrative centres and superior quality residential developments

Standard version
- Lever handle length 126 mm, ø 22 mm
- Projection 49 mm
- Square spindle 8 mm
- Solid satin stainless steel
- 16 mm guide for Glutz glide / needle bearing (NL) / easyfix®
- Picture shows handle with 5620C rose

Options
- Polished stainless steel
- RAL lacquered
- PVD lacquered
- Square spindle 8,5 mm or 9 mm
- 16 mm guide for Glutz twin glide
- Version for narrow stile doors
- Category of use class 4, EN 1906: 2002-05

Quality standard
- Category of use class 3, EN 1906: 2002-05
- Tested for use in fire-rated and smoke protection doors to DIN 18273: 1997-12
- Admitted, combined with the appropriate lock as lever handle for emergency exits as per EN 179: 2002-06

5039/5616 CF
Stainless steel window handle
p.200

8500
Stainless steel window drive
p.241

2.1 Lever handle

Stainless steel lever handle
5040 Mercury

EN 1906
KL 3/4

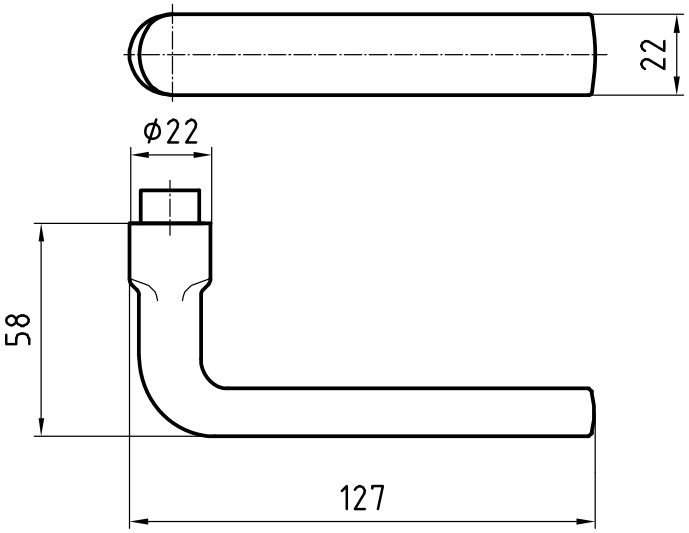

Product profile
Commercial buildings, administrative centres and superior quality residential developments

Standard version
- Lever handle length 127 mm, ø 22 mm
- Projection 58 mm
- Square spindle 8 mm
- Solid satin stainless steel
- 16 mm guide for Glutz glide / needle bearing (NL) / easyfix®
- Picture shows handle with 5620C rose

Options
- Polished stainless steel
- RAL lacquered
- PVD lacquered
- Square spindle 8,5 mm or 9 mm
- 16 mm guide for Glutz twin glide
- Version for narrow stile doors
- Category of use class 4, EN 1906: 2002-05

Quality standard
- Category of use class 3, EN 1906: 2002-05
- Tested for use in fire-rated and smoke protection doors to DIN 18273: 1997-12

5040/5616 CF
Stainless steel window handle
p.201

8500
Stainless steel window drive
p.241

2.1 Lever handle

Stainless steel lever handle
5046 Paris

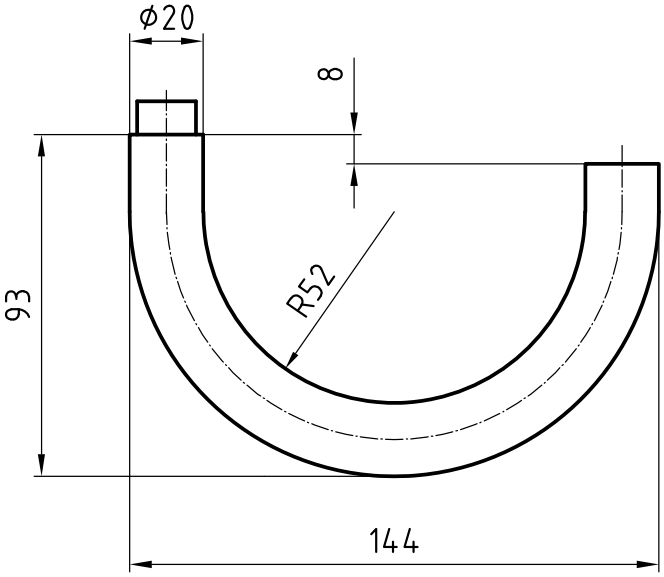

Product profile
Commercial buildings, administrative centres, schools, residential homes

Standard version
- Lever handle length 144 mm, ø 20 mm
- Projection 93 mm
- Square spindle 8 mm
- Satin stainless steel
- 16 mm guide for Glutz glide / needle bearing (NL) / easyfix®
- Picture shows handle with 5620C rose

Options
- Polished stainless steel
- RAL lacquered
- PVD lacquered
- Square spindle 8,5 mm or 9 mm
- With ball end
- 16 mm guide for Glutz twin glide
- Category of use class 4, EN 1906: 2002-05

Quality standard
- Category of use class 3, EN 1906: 2002-05
- Tested for use in fire-rated and smoke protection doors to DIN 18273: 1997-12
- Admitted, combined with the appropriate lock as lever handle for emergency exits as per EN 179: 2002-06

5046/5616 CF
Stainless steel window handle
p.202

8500
Stainless steel window drive
p.241

2.1 Lever handle

Stainless steel lever handle
5050 Piraeus

EN 1906
KL 3/4

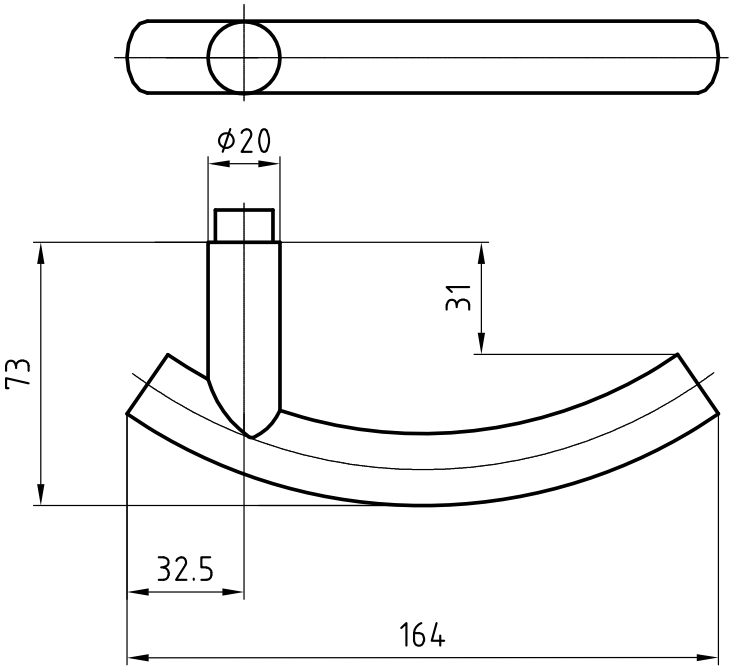

Product profile
Commercial buildings, administrative centres and superior quality residential developments

Standard version
- Lever handle length 164 mm, ø 20 mm
- Projection 73 mm
- Square spindle 8 mm
- Satin stainless steel
- 16 mm guide for Glutz glide / needle bearing (NL) / easyfix®
- Picture shows handle with 5620C rose

Options
- Polished stainless steel
- RAL lacquered
- PVD lacquered
- Square spindle 8,5 mm or 9 mm
- 16 mm guide for Glutz twin glide
- Category of use class 4, EN 1906: 2002-05

Quality standard
- Category of use class 3, EN 1906: 2002-05
- Tested for use in fire-rated and smoke protection doors to DIN 18273: 1997-12

5051
Stainless steel lever handle
p.30

5050/5616 CF
Stainless steel window handle
p.203

8500
Stainless steel window drive
p.241

2.1 Lever handle

Stainless steel lever handle
5051 Athens

EN 1906
KL 3/4

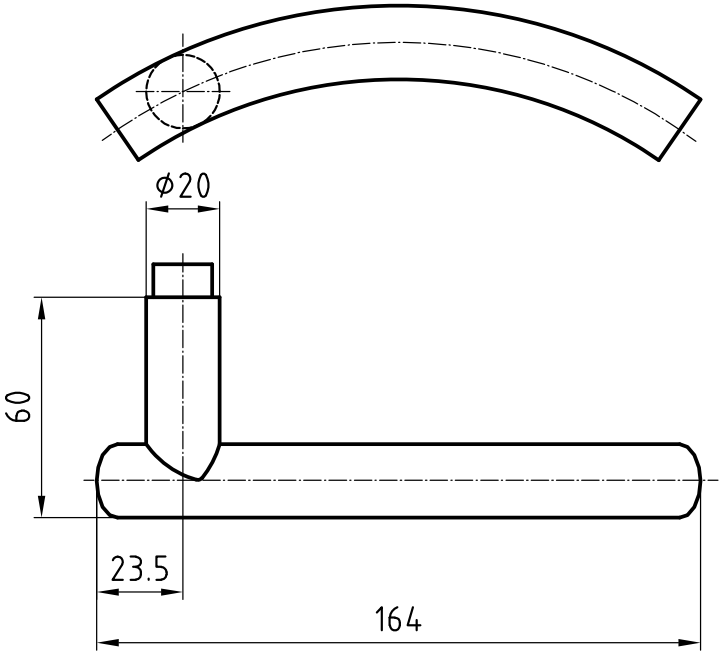

Product profile
Commercial buildings, administrative centres and superior quality residential developments

Standard version
- Lever handle length 164 mm, ø 20 mm
- Projection 60 mm
- Square spindle 8 mm
- Satin stainless steel
- Handing to be specified
- 16 mm guide for Glutz glide / needle bearing (NL) / easyfix®
- Picture shows handle with 5620C rose

Options
- Polished stainless steel
- RAL lacquered
- PVD lacquered
- Square spindle 8,5 mm or 9 mm
- 16 mm guide for Glutz twin glide
- Category of use class 4, EN 1906: 2002-05

Quality standard
- Category of use class 3, EN 1906: 2002-05
- Tested for use in fire-rated and smoke protection doors to DIN 18273: 1997-12

5050
Stainless steel lever handle
p.29

5050/5616 CF
Stainless steel window handle
p.203

8500
Stainless steel window drive
p.241

2.1 Lever handle

Stainless steel lever handle
5052 Biel

EN 1906
KL 3/4

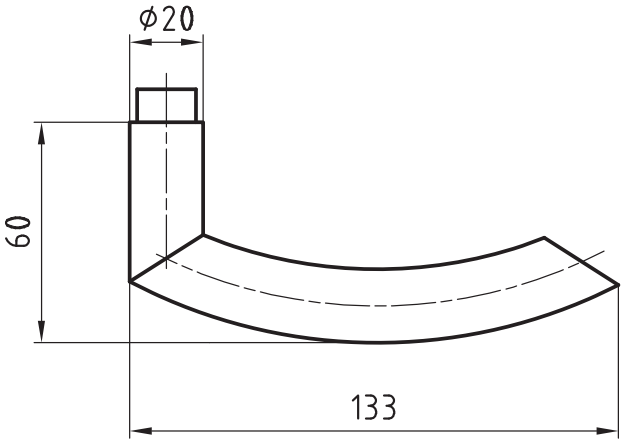

Product profile
Commercial buildings, administrative centres and superior quality residential developments

Standard version
- Lever handle length 133 mm, ø 20 mm
- Projection 60 mm
- Square spindle 8 mm
- Satin stainless steel
- 16 mm guide for Glutz glide / needle bearing (NL) / easyfix®
- Picture shows handle with 5620C rose

Options
- Polished stainless steel
- RAL lacquered
- PVD lacquered
- Square spindle 8,5 mm or 9 mm
- 16 mm guide for Glutz twin glide
- Version for narrow stile doors
- Category of use class 4, EN 1906: 2002-05

Quality standard
- Category of use class 3, EN 1906: 2002-05
- Tested for use in fire-rated and smoke protection doors to DIN 18273: 1997-12

5052/5616 CF
Stainless steel window handle
p.204

8500
Stainless steel window drive
p.241

2.1 Lever handle

Stainless steel lever handle
5053 Bruges

EN 1906
KL 3/4

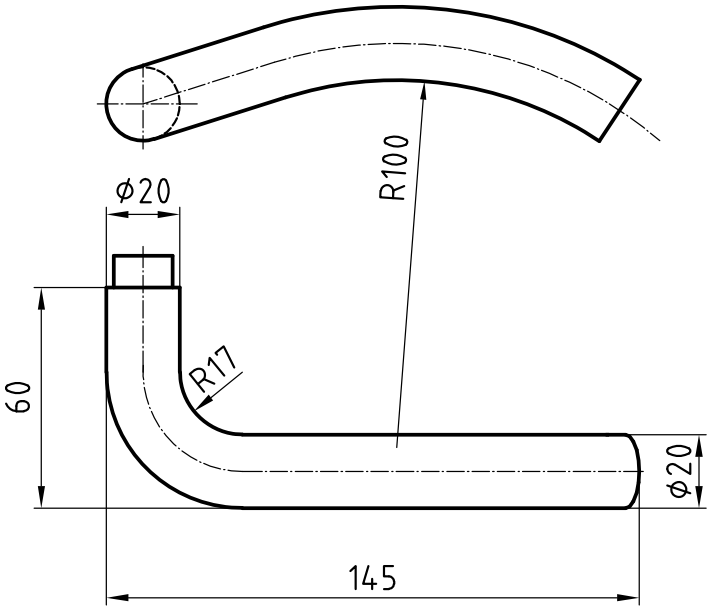

Product profile
Commercial buildings, administrative centres and superior quality residential developments

Standard version
- Lever handle length 145 mm, ø 20 mm
- Projection 60 mm
- Square spindle 8 mm
- Satin stainless steel
- Handing to be specified
- 16 mm guide for Glutz glide / needle bearing (NL) / easyfix®
- Picture shows handle with 5620C rose

Options
- Polished stainless steel
- RAL lacquered
- PVD lacquered
- Square spindle 8,5 mm or 9 mm
- 16 mm guide for Glutz twin glide
- Category of use class 4, EN 1906: 2002-05

Quality standard
- Category of use class 3, EN 1906: 2002-05
- Tested for use in fire-rated and smoke protection doors to DIN 18273: 1997-12

5057/5616 CF
Stainless steel window handle
p.207

8500
Stainless steel window drive
p.241

2.1 Lever handle

Stainless steel lever handle
5054 Uppsala

EN 179

EN 1906
KL 3/4

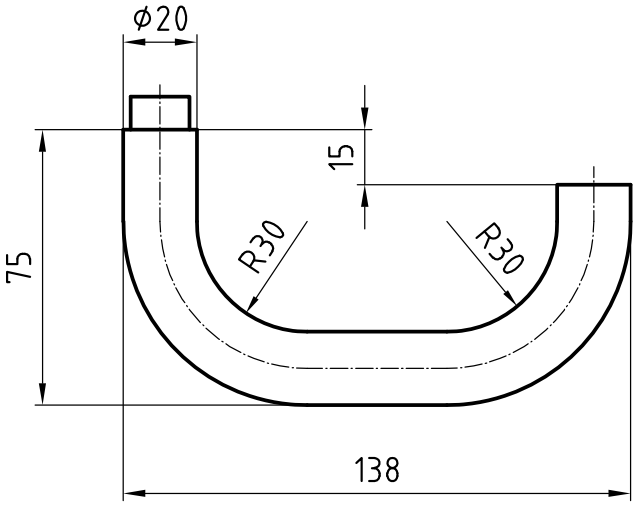

Product profile
Hospitals, commercial buildings, administrative centres

Standard version
- Lever handle length 138 mm, ø 20 mm
- Projection 75 mm
- Square spindle 8 mm
- Satin stainless steel
- 16 mm guide for Glutz glide / needle bearing (NL) / easyfix®
- Picture shows handle with 5620C rose

Options
- Polished stainless steel
- RAL lacquered
- PVD lacquered
- Square spindle 8,5 mm or 9 mm
- 16 mm guide for Glutz twin glide
- Category of use class 4, EN 1906: 2002-05

Quality standard
- Category of use class 3, EN 1906: 2002-05
- Tested for use in fire-rated and smoke protection doors to DIN 18273: 1997-12
- Admitted, combined with the appropriate lock as lever handle for emergency exits as per EN 179: 2002-06

5154
Stainless steel lever handle
p.62

5054/5616 CF
Stainless steel window handle
p.205

8500
Stainless steel window drive
p.241

2.1 Lever handle

Stainless steel lever handle
5055 Malmö

EN 179

EN 1906
KL 3/4

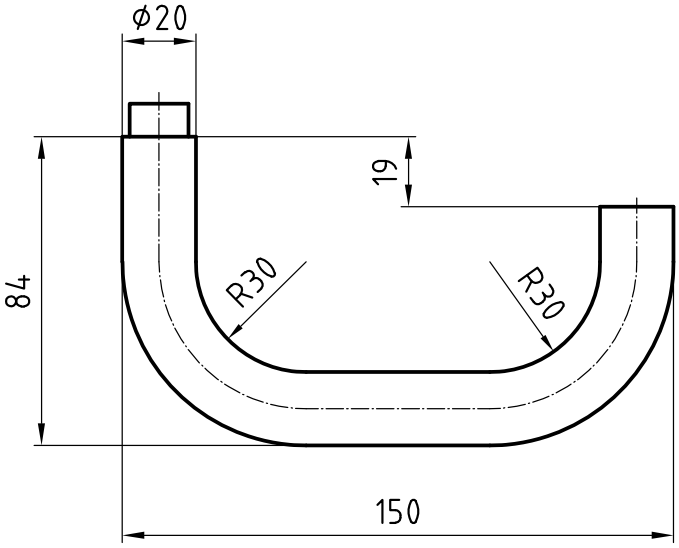

Product profile
Hospitals, commercial buildings, administrative centres

Standard version
- Lever handle length 150 mm, ø 20 mm
- Projection 84 mm
- Square spindle 8 mm
- Satin stainless steel
- 16 mm guide for Glutz glide / needle bearing (NL) / easyfix®
- Picture shows handle with 5620C rose

Options
- Polished stainless steel
- RAL lacquered
- PVD lacquered
- Square spindle 8,5 mm or 9 mm
- 16 mm guide for Glutz twin glide
- Category of use class 4, EN 1906: 2002-05

Quality standard
- Category of use class 3, EN 1906: 2002-05
- Tested for use in fire-rated and smoke protection doors to DIN 18273: 1997-12
- Admitted, combined with the appropriate lock as lever handle for emergency exits as per EN 179: 2002-06

5155
Stainless steel lever handle
p.63

5054/5616 CF
Stainless steel window handle
p.205

8500
Stainless steel window drive
p.241

5155-280/5613
Stainless steel handle PSK + HST
p.238

5155-280/5619K
Stainless steel handle PSK + HST
p.239

2.1 Lever handle

Stainless steel lever handle
5056 Berlin

EN 1906
KL 3/4

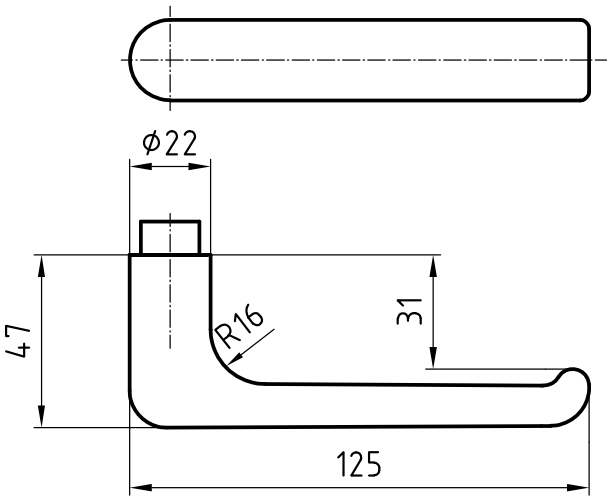

Product profile
Commercial buildings, administrative centres and superior quality residential developments

Standard version
- Lever handle length 125 mm, ø 22 mm
- Projection 47 mm
- Square spindle 8 mm
- Solid satin stainless steel
- 16 mm guide for Glutz glide / needle bearing (NL) / easyfix®
- Picture shows handle with 5620C rose

Options
- Polished stainless steel
- RAL lacquered
- PVD lacquered
- Square spindle 8,5 mm or 9 mm
- 16 mm guide for Glutz twin glide
- Version for narrow stile doors
- Category of use class 4, EN 1906: 2002-05

Quality standard
- Category of use class 3, EN 1906: 2002-05
- Tested for use in fire-rated and smoke protection doors to DIN 18273: 1997-12

5056/5616 CF
Stainless steel window handle
p.206

8500
Stainless steel window drive
p.241

2.1 Lever handle

Stainless steel lever handle
5057 Thun

EN 1906
KL 3/4

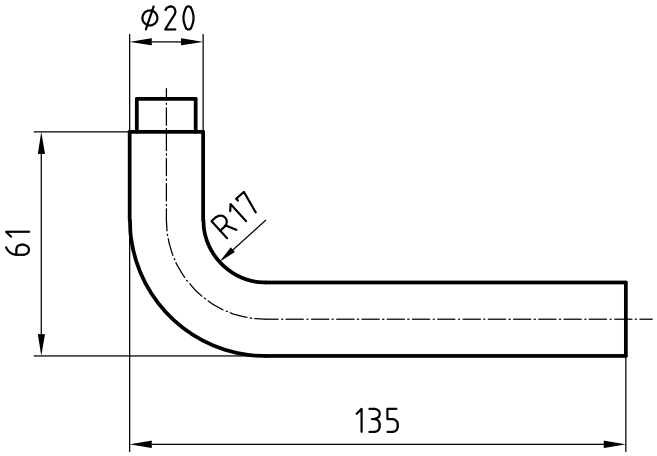

Product profile
Commercial buildings, administrative centres and superior quality residential developments

Standard version
- Lever handle length 135 mm, ø 20 mm
- Projection 61 mm
- Square spindle 8 mm
- Satin stainless steel
- 16 mm guide for Glutz glide / needle bearing (NL) / easyfix®
- Picture shows handle with 5620C rose

Options
- Polished stainless steel
- RAL lacquered
- PVD lacquered
- Square spindle 8,5 mm or 9 mm
- With ball end
- 16 mm guide for Glutz twin glide
- Version for narrow stile doors
- Category of use class 4, EN 1906: 2002-05

Quality standard
- Category of use class 3, EN 1906: 2002-05
- Tested for use in fire-rated and smoke protection doors to DIN 18273: 1997-12

5070
Stainless steel lever handle
p.45

5057/5616 CF
Stainless steel window handle
p.207

8500
Stainless steel window drive
p.241

5057-280/5613
Stainless steel handle PSK + HST
p.234

5057-280/5619K
Stainless steel handle PSK + HST
p.235

2.1 Lever handle

Stainless steel lever handle
5060 Zug

EN 1906
KL 3/4

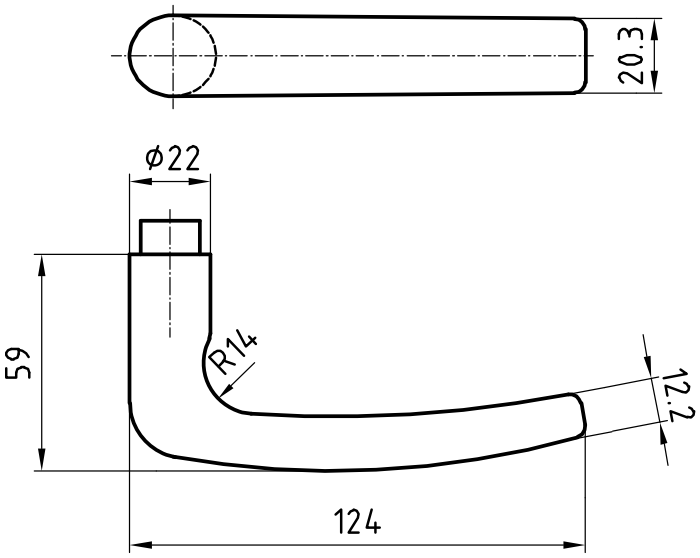

Product profile
Commercial buildings, administrative centres and superior quality residential developments

Standard version
- Lever handle length 124 mm, ø 22 mm
- Projection 59 mm
- Square spindle 8 mm
- Solid satin stainless steel
- 16 mm guide for Glutz glide / needle bearing (NL) / easyfix®
- Picture shows handle with 5620C rose

Options
- Polished stainless steel
- RAL lacquered
- PVD lacquered
- Square spindle 8,5 mm or 9 mm
- 16 mm guide for Glutz twin glide
- Version for narrow stile doors
- Category of use class 4, EN 1906: 2002-05

Quality standard
- Category of use class 3, EN 1906: 2002-05
- Tested for use in fire-rated and smoke protection doors to DIN 18273: 1997-12

5060/5616 CF
Stainless steel window handle
p.208

8500
Stainless steel window drive
p.241

2.1 Lever handle

Stainless steel lever handle
5061 Jackson

EN 1906
KL 3/4

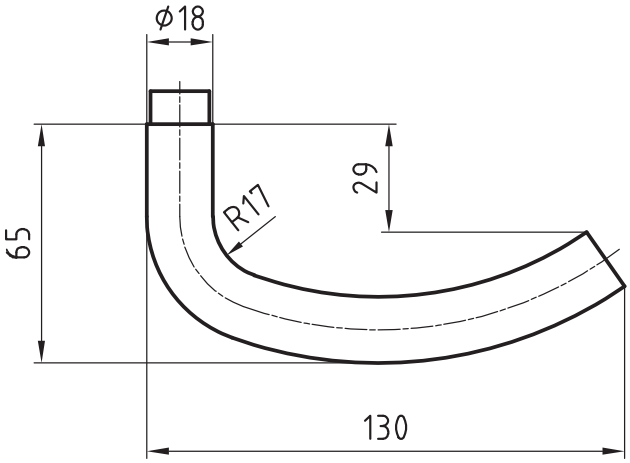

Product profile
Commercial buildings, administrative centres and superior quality residential developments

Standard version
- Lever handle length 130 mm, ø 18 mm
- Projection 65 mm
- Square spindle 8 mm
- Satin stainless steel
- 16 mm guide for Glutz glide / needle bearing (NL) / easyfix®
- Picture shows handle with 5620C rose

Options
- Polished stainless steel
- RAL lacquered
- PVD lacquered
- Square spindle 8,5 mm or 9 mm
- With ball end
- Category of use class 4, EN 1906: 2002-05

Quality standard
- Category of use class 3, EN 1906: 2002-05
- Tested for use in fire-rated and smoke protection doors to DIN 18273: 1997-12

5062
Stainless steel lever handle
p.39

5162
Stainless steel lever handle
p.64

5061/5616 CF
Stainless steel window handle
p.209

8500
Stainless steel window drive
p.241

2.1 Lever handle

Stainless steel lever handle
5062 New Orleans

EN 179

EN 1906
KL 3/4

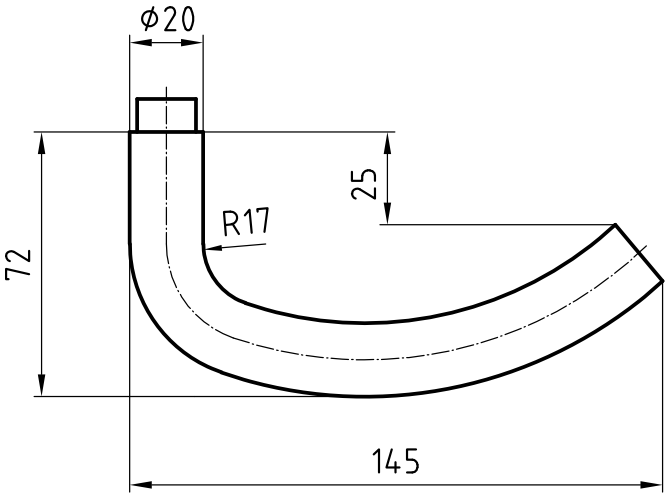

Product profile
Commercial buildings, administrative centres and superior quality residential developments

Standard version
- Lever handle length 145 mm, ø 20 mm
- Projection 72 mm
- Square spindle 8 mm
- Satin stainless steel
- 16 mm guide for Glutz glide / needle bearing (NL) / easyfix®
- Picture shows handle with 5620C rose

Options
- Polished stainless steel
- RAL lacquered
- PVD lacquered
- Square spindle 8,5 mm or 9 mm
- With ball end
- 16 mm guide for Glutz twin glide
- Version for narrow stile doors
- Category of use class 4, EN 1906: 2002-05

Quality standard
- Category of use class 3, EN 1906: 2002-05
- Tested for use in fire-rated and smoke protection doors to DIN 18273: 1997-12
- Admitted, combined with the appropriate lock as lever handle for emergency exits as per EN 179: 2002-06

5061
Stainless steel lever handle
p.38

5162
Stainless steel lever handle
p.64

5062/5616 CF
Stainless steel window handle
p.210

8500
Stainless steel window drive
p.241

2.1 Lever handle

Stainless steel lever handle
5064 Oslo

EN 179

EN 1906
KL 3/4

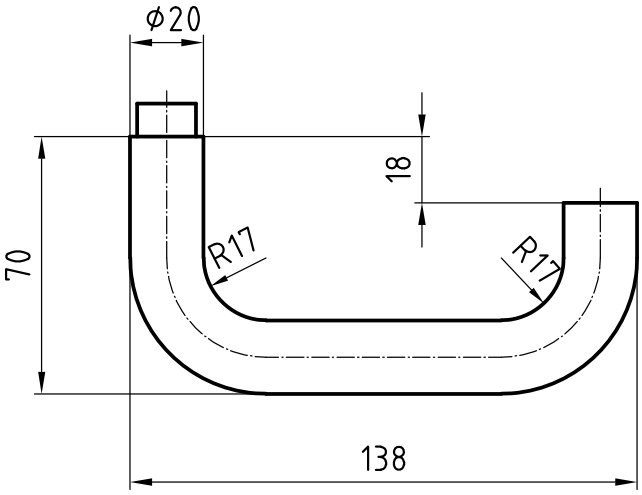

Product profile
Hospitals, commercial buildings, administrative centres

Standard version
- Lever handle length 138 mm, ø 20 mm
- Projection 70 mm
- Square spindle 8 mm
- Satin stainless steel
- 16 mm guide for Glutz glide / needle bearing (NL) / easyfix®
- Picture shows handle with 5620C rose

Options
- Polished stainless steel
- RAL lacquered
- PVD lacquered
- Square spindle 8,5 mm or 9 mm
- With ball end
- 16 mm guide for Glutz twin glide
- Offset version (5059)
- Category of use class 4, EN 1906: 2002-05

Quality standard
- Category of use class 3, EN 1906: 2002-05
- Tested for use in fire-rated and smoke protection doors to DIN 18273: 1997-12
- Admitted, combined with the appropriate lock as lever handle for emergency exits as per EN 179: 2002-06

5059
Stainless steel metal frame lever handle
p.146

5175
Stainless steel metal frame lever handle
p.151

5064A/5616 CF
Stainless steel window handle
p.211

8500
Stainless steel window drive
p.241

2.1 Lever handle

Stainless steel lever handle
5065 Rena

EN 179

EN 1906
KL 3/4

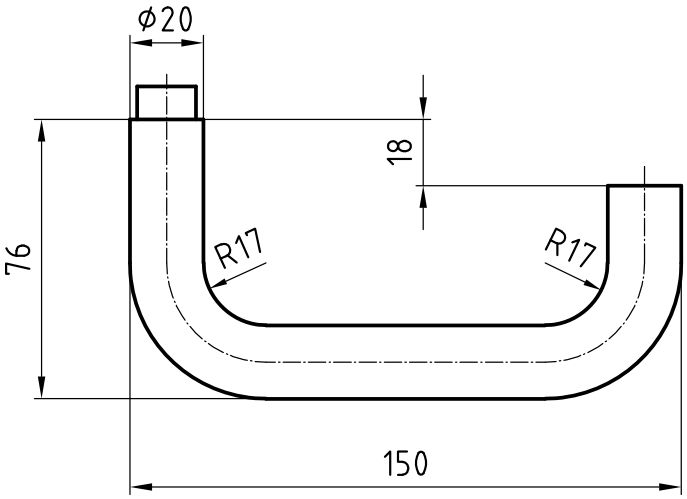

Product profile
Hospitals, commercial buildings, administrative centres

Standard version
- Lever handle length 150 mm, ø 20 mm
- Projection 76 mm
- Square spindle 8 mm
- Satin stainless steel
- 16 mm guide for Glutz glide / needle bearing (NL) / easyfix®
- Picture shows handle with 5620C rose

Options
- Polished stainless steel
- RAL lacquered
- PVD lacquered
- Square spindle 8,5 mm or 9 mm
- 16 mm guide for Glutz twin glide
- Category of use class 4, EN 1906: 2002-05

Quality standard
- Category of use class 3, EN 1906: 2002-05
- Tested for use in fire-rated and smoke protection doors to DIN 18273: 1997-12
- Admitted, combined with the appropriate lock as lever handle for emergency exits as per EN 179: 2002-06

5059
Stainless steel metal frame lever handle
p.146

5064A/5616 CF
Stainless steel window handle
p.211

8500
Stainless steel window drive
p.241

5155-280/5619K
Stainless steel handle PSK + HST
p.239

2.1 Lever handle

Stainless steel lever handle
5066 Savannah

EN 179

EN 1906
KL 3/4

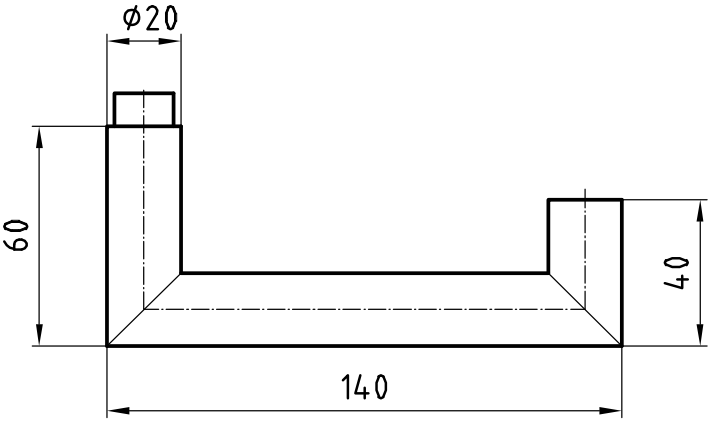

Product profile
Commercial buildings, administrative centres and superior quality residential developments

Standard version
- Lever handle length 140 mm, ø 20 mm
- Projection 60 mm
- Square spindle 8 mm
- Satin stainless steel
- 16 mm guide for Glutz glide / needle bearing (NL) / easyfix®
- Picture shows handle with 5620C rose

Options
- Polished stainless steel
- RAL lacquered
- PVD lacquered
- Square spindle 8,5 mm or 9 mm
- 16 mm guide for Glutz twin glide
- Version for narrow stile doors
- Category of use class 4, EN 1906: 2002-05

Quality standard
- Category of use class 3, EN 1906: 2002-05
- Tested for use in fire-rated and smoke protection doors to DIN 18273: 1997-12
- Admitted, combined with the appropriate lock as lever handle for emergency exits as per EN 179: 2002-06

5071
Stainless steel lever handle
p.46

5072
Stainless steel metal frame lever handle
p.148

5071/5616 CF
Stainless steel window handle
p.215

8500
Stainless steel window drive
p.241

2.1 Lever handle

Stainless steel lever handle
5068 Garbsen

EN 1906
KL 3/4

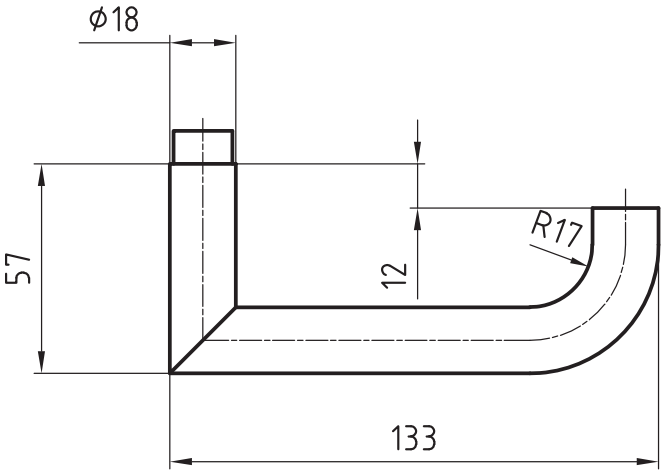

Product profile
Residential construction

Standard version
- Lever handle length 133 mm, ø 18 mm
- Projection 57 mm
- Square spindle 8 mm
- Satin stainless steel
- 16 mm guide for Glutz glide / needle bearing (NL) / easyfix®
- Picture shows handle with 5620C rose

Options
- Polished stainless steel
- RAL lacquered
- PVD lacquered
- Square spindle 8,5 mm or 9 mm
- Category of use class 4, EN 1906: 2002-05

Quality standard
- Category of use class 3, EN 1906: 2002-05
- Tested for use in fire-rated and smoke protection doors to DIN 18273: 1997-12

5069
Stainless steel lever handle
p.44

5068/5616 CF
Stainless steel window handle
p.212

8500
Stainless steel window drive
p.241

2.1 Lever handle

Stainless steel lever handle
5069 Hannover

EN 179

EN 1906
KL 3/4

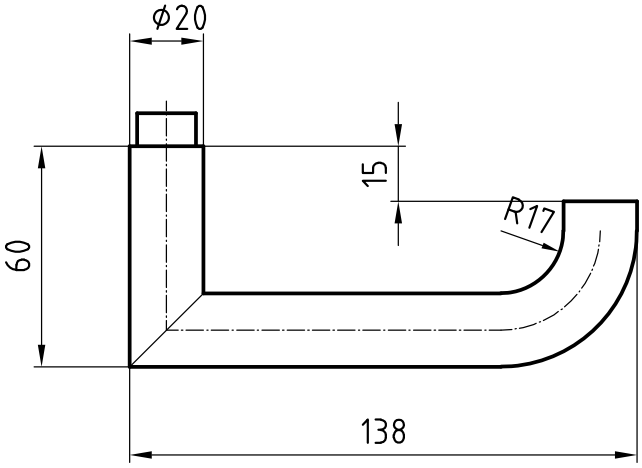

Product profile
Commercial buildings, administrative centres and superior quality residential developments

Standard version
- Lever handle length 138 mm, ø 20 mm
- Projection 60 mm
- Square spindle 8 mm
- Satin stainless steel
- 16 mm guide for Glutz glide / needle bearing (NL) / easyfix®
- Picture shows handle with 5620C rose

Options
- Polished stainless steel
- RAL lacquered
- PVD lacquered
- Square spindle 8,5 mm or 9 mm
- 16 mm guide for Glutz twin glide
- Version for narrow stile doors
- Category of use class 4, EN 1906: 2002-05

Quality standard
- Category of use class 3, EN 1906: 2002-05
- Tested for use in fire-rated and smoke protection doors to DIN 18273: 1997-12
- Admitted, combined with the appropriate lock as lever handle for emergency exits as per EN 179: 2002-06

5068
Stainless steel lever handle
p.43

5068/5616 CF
Stainless steel window handle
p.212

8500
Stainless steel window drive
p.241

2.1 Lever handle

Stainless steel lever handle
5070 Berne

EN 1906
KL 3/4

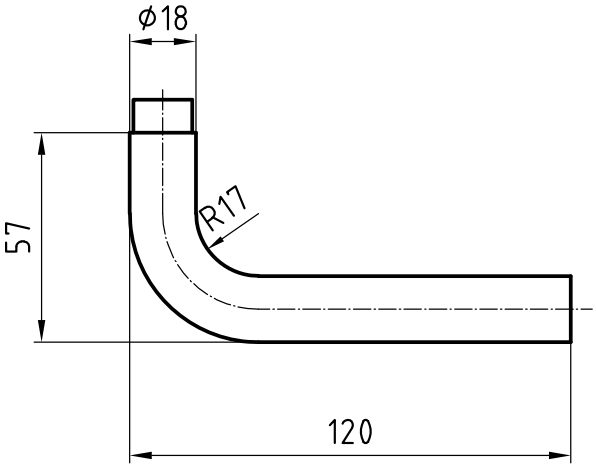

Product profile
Residential construction

Standard version
- Lever handle length 120 mm, ø 18 mm
- Projection 57 mm
- Square spindle 8 mm
- Satin stainless steel
- 16 mm guide for Glutz glide / needle bearing (NL) / easyfix®
- Picture shows handle with 5620C rose

Options
- Polished stainless steel
- RAL lacquered
- PVD lacquered
- Square spindle 8,5 mm or 9 mm
- Category of use class 4, EN 1906: 2002-05

Quality standard
- Category of use class 3, EN 1906: 2002-05
- Tested for use in fire-rated and smoke protection doors to DIN 18273: 1997-12

5057
Stainless steel lever handle
p.36

5070/5616 CF
Stainless steel window handle
p.214

8500
Stainless steel window drive
p.241

5057-280/5613
Stainless steel handle PSK + HST
p.234

5057-280/5619K
Stainless steel handle PSK + HST
p.235

2.1 Lever handle

Stainless steel lever handle
5071 Memphis

EN 1906
KL 3/4

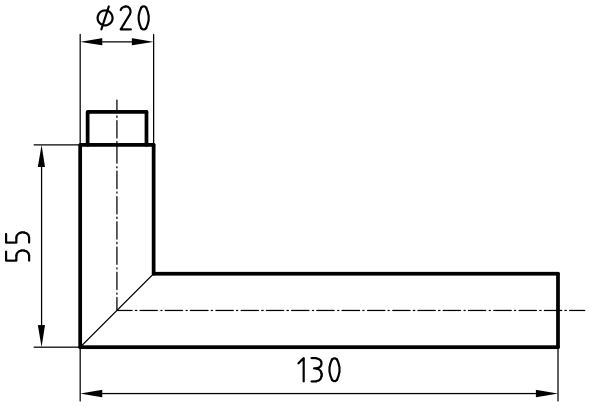

Product profile
Commercial buildings, administrative centres and superior quality residential developments

Standard version
- Lever handle length 130 mm, ø 20 mm
- Projection 55 mm
- Square spindle 8 mm
- Satin stainless steel
- 16 mm guide for Glutz glide / needle bearing (NL) / easyfix®
- Picture shows handle with 5620C rose

Options
- Polished stainless steel
- RAL lacquered
- PVD lacquered
- Square spindle 8,5 mm or 9 mm
- 16 mm guide for Glutz twin glide
- Version for narrow stile doors (5072)
- Category of use class 4, EN 1906: 2002-05

Quality standard
- Category of use class 3, EN 1906: 2002-05
- Tested for use in fire-rated and smoke protection doors to DIN 18273: 1997-12

5072
Stainless steel metal frame lever handle
p.148

5071/5616 CF
Stainless steel window handle
p.215

8500
Stainless steel window drive
p.241

5071-280/5613
Stainless steel handle PSK + HST
p.236

5071-280/5619K
Stainless steel handle PSK + HST
p.237

2.1 Lever handle

Product profile
Residential construction

Standard version
- Lever handle length 110 mm, ø 18 mm
- Projection 50 mm
- Square spindle 8 mm
- Satin stainless steel
- 16 mm guide for Glutz glide / needle bearing (NL) / easyfix®
- Picture shows handle with 5620C rose

Options
- Polished stainless steel
- RAL lacquered
- PVD lacquered
- Square spindle 8,5 mm or 9 mm
- Category of use class 4, EN 1906: 2002-05

Quality standard
- Category of use class 3, EN 1906: 2002-05
- Tested for use in fire-rated and smoke protection doors to DIN 18273: 1997-12

Stainless steel lever handle
5073 Banks

EN 1906
KL 3/4

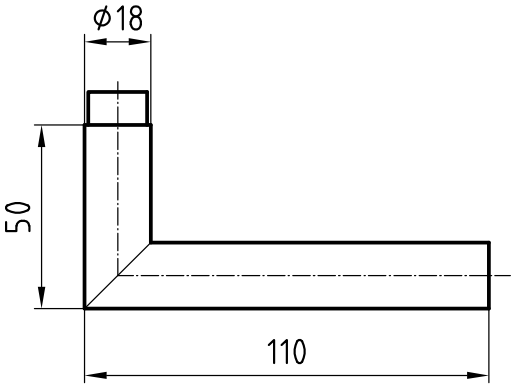

5071
Stainless steel lever handle
p.46

5072
Stainless steel metal frame lever handle
p.148

5073/5616 CF
Stainless steel window handle
p.216

8500
Stainless steel window drive
p.241

2.1 Lever handle

Stainless steel lever handle
5076 Helena

EN 1906
KL 3/4

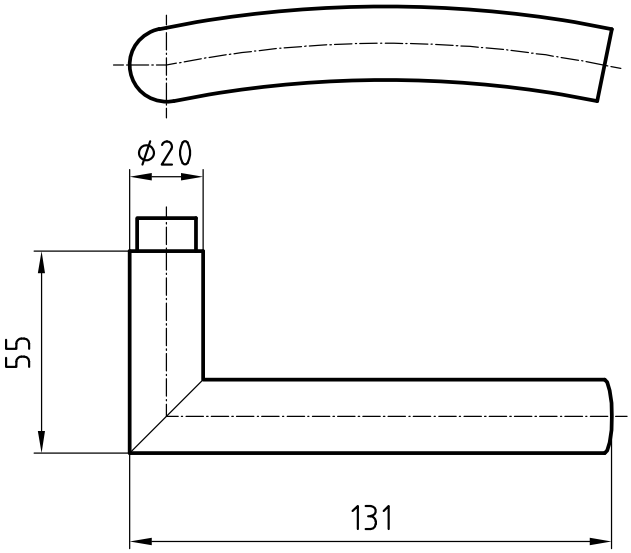

Product profile
Commercial buildings, administrative centres and superior quality residential developments

Standard version
- Lever handle length 131 mm, ø 20 mm
- Projection 55 mm
- Square spindle 8 mm
- Satin stainless steel
- Handing to be specified
- 16 mm guide for Glutz glide / needle bearing (NL) / easyfix®
- Picture shows handle with 5620C rose

Options
- Polished stainless steel
- RAL lacquered
- PVD lacquered
- Square spindle 8,5 mm or 9 mm
- 16 mm guide for Glutz twin glide
- Category of use class 4, EN 1906: 2002-05

Quality standard
- Category of use class 3, EN 1906: 2002-05
- Tested for use in fire-rated and smoke protection doors to DIN 18273: 1997-12

5071
Stainless steel lever handle
p.46

5071/5616 CF
Stainless steel window handle
p.215

8500
Stainless steel window drive
p.241

5071-280/5613
Stainless steel handle PSK + HST
p.236

5071-280/5619K
Stainless steel handle PSK + HST
p.237

2.1 Lever handle

Stainless steel lever handle
5080 Sapphire

EN 1906
KL 3/4

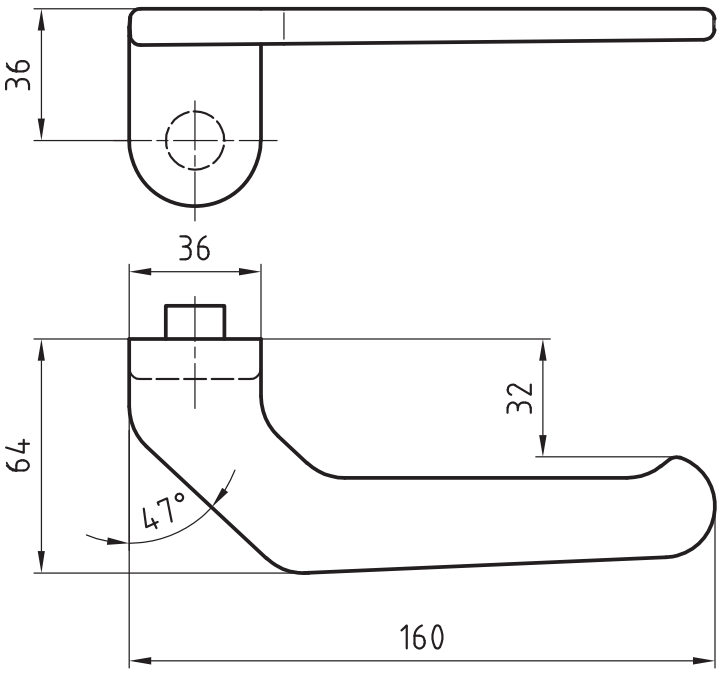

Product profile
Banks, commercial buildings, administrative centres

Standard version
- Lever handle length 160 mm, ø 36 mm
- Projection 64 mm
- Square spindle 8 mm
- Solid satin stainless steel
- Fixed on base plate
- 16 mm guide for Glutz needle bearing (NL) / easyfix®
- Base plate on one side with guided cam CN
- Base plate on one side with threaded cam M4 CG
- Handing to be specified
- Picture shows handle with 5390C

Options
- Polished stainless steel
- Square spindle 9 mm
- Category of use class 4, EN 1906: 2002-05

Quality standard
- Category of use class 3, EN 1906: 2002-05
- Tested for use in fire-rated and smoke protection doors to DIN 18273: 1997-12

5085/5616 CF
Stainless steel window handle
p.218

8500
Stainless steel window drive
p.241

5835
Stainless steel door knob
p.76

5390C
Stainless steel short plate to clips
p.117

2.1 Lever handle

Stainless steel lever handle
5083 Tulln

EN 179

EN 1906
KL 3/4

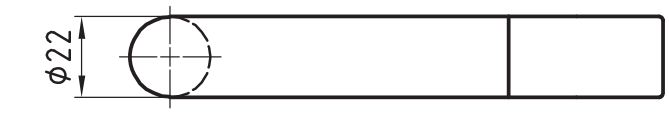

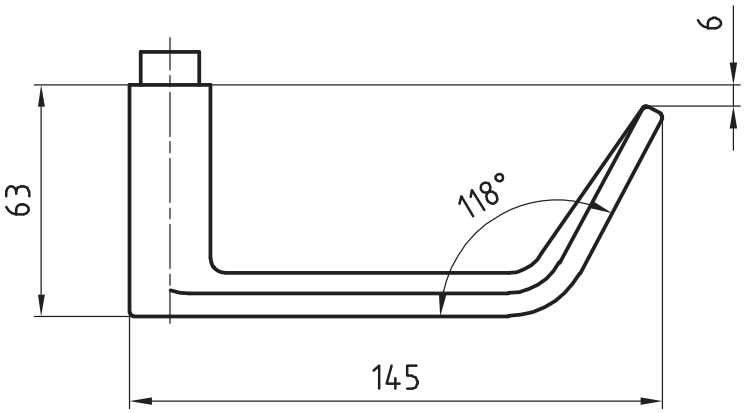

Product profile
Commercial buildings, administrative centres and superior quality residential developments

Standard version
- Lever handle length 145 mm, ø 22 mm
- Projection 63 mm
- Square spindle 8 mm
- Solid satin stainless steel
- 16 mm guide for Glutz glide / needle bearing (NL) / easyfix®
- Picture shows handle with 5620C rose

Options
- Polished stainless steel
- RAL lacquered
- PVD lacquered
- Square spindle 8,5 mm or 9 mm
- 16 mm guide for Glutz twin glide
- Version for narrow stile doors
- Category of use class 4, EN 1906: 2002-05

Quality standard
- Category of use class 3, EN 1906: 2002-05
- Tested for use in fire-rated and smoke protection doors to DIN 18273: 1997-12
- Admitted, combined with the appropriate lock as lever handle for emergency exits as per EN 179: 2002-06

5089
Stainless steel metal frame lever handle
p.149

5083/5616 CF
Stainless steel window handle
p.217

8500
Stainless steel window drive
p.241

2.1 Lever handle

Stainless steel lever handle
5084 Baden

EN 1906
KL 3/4

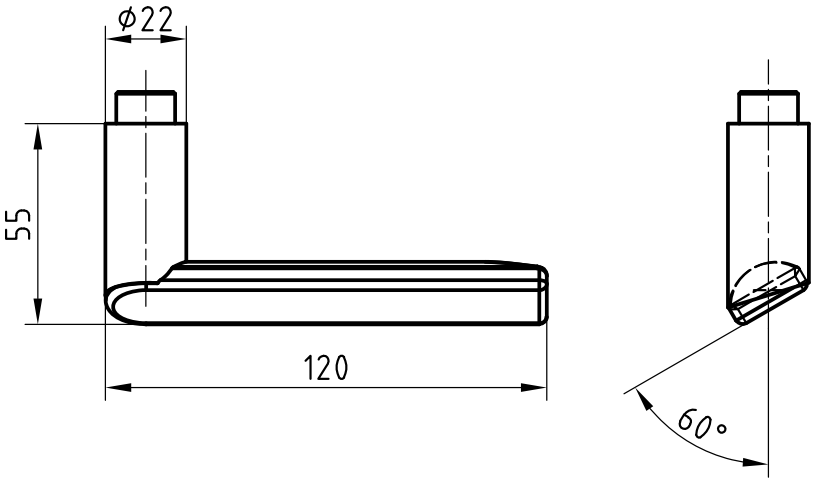

Product profile
Banks, commercial buildings, administrative centres

Standard version
- Lever handle length 120 mm, ø 22 mm
- Projection 55 mm
- Square spindle 8 mm
- Solid satin stainless steel
- Handing to be specified
- 16 mm guide for Glutz glide / needle bearing (NL) / easyfix®
- Picture shows handle with 5620C rose

Options
- Polished stainless steel
- RAL lacquered
- PVD lacquered
- Square spindle 8,5 mm or 9 mm
- 16 mm guide for Glutz twin glide
- Version for narrow stile doors
- Category of use class 4, EN 1906: 2002-05

Quality standard
- Category of use class 3, EN 1906: 2002-05
- Tested for use in fire-rated and smoke protection doors to DIN 18273: 1997-12

5088
Stainless steel lever handle
p.53

5089
Stainless steel metal frame lever handle
p.149

5088/5616 CF
Stainless steel window handle
p.220

8500
Stainless steel window drive
p.241

2.1 Lever handle

Stainless steel lever handle
5087 INOX Basle

EN 1906
KL 3/4

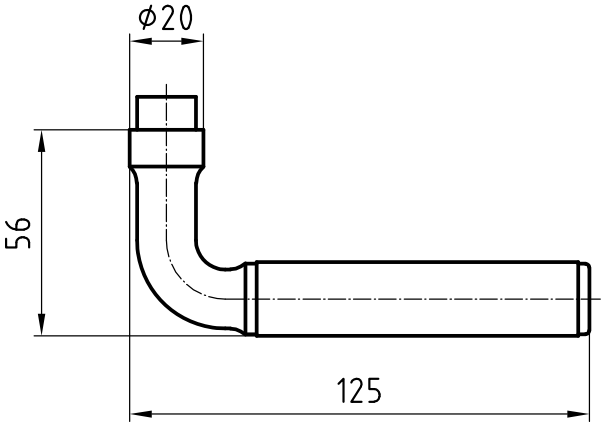

Product profile
Commercial buildings, administrative centres and superior quality residential developments

Standard version
- Lever handle length 125 mm, ø 20 mm
- Projection 56 mm
- Square spindle 8 mm
- Solid satin stainless steel shoulder
- Satin stainless steel tube
- 16 mm guide for Glutz glide / needle bearing (NL) / easyfix®
- Picture shows handle with 5620C rose

Options
- Polished stainless steel shoulder
- Square spindle 8,5 mm or 9 mm
- 16 mm guide for Glutz twin glide
- Version for narrow stile doors
- Category of use class 4, EN 1906: 2002-05
- Tubes available in:
- Polished stainless steel
- Stainless steel PVD-coated, brass coloured
- Stainless steel RAL-coated, in acc. with colour chart

Quality standard
- Category of use class 3, EN 1906: 2002-05
- Tested for use in fire-rated and smoke protection doors to DIN 18273: 1997-12

5287
Stainless steel lever handle
p.65

5087/5616 CF
Stainless steel window handle
p.219

8500
Stainless steel window drive
p.241

2.1 Lever handle

Stainless steel lever handle
5088 Zurich

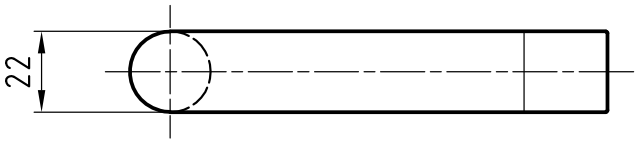

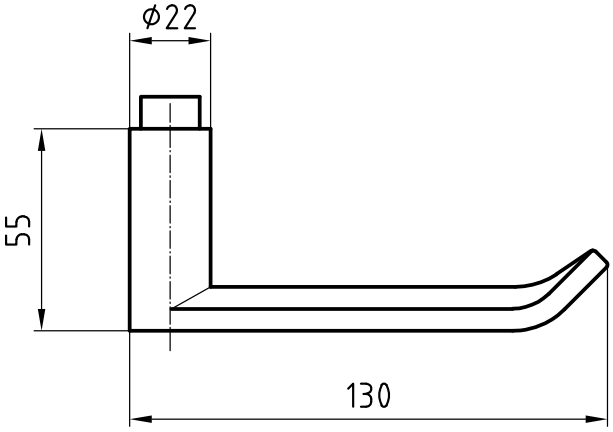

Product profile
Banks, commercial buildings, administrative centres

Standard version
- Lever handle length 130 mm, ø 22 mm
- Projection 55 mm
- Square spindle 8 mm
- Solid satin stainless steel
- 16 mm guide for Glutz glide / needle bearing (NL) / easyfix®
- Picture shows handle with 5620C rose

Options
- Polished stainless steel
- RAL lacquered
- PVD lacquered
- Square spindle 8,5 mm or 9 mm
- 16 mm guide for Glutz twin glide
- Version for narrow stile doors
- Category of use class 4, EN 1906: 2002-05

Quality standard
- Category of use class 3, EN 1906: 2002-05
- Tested for use in fire-rated and smoke protection doors to DIN 18273: 1997-12
- Admitted, combined with the appropriate lock as lever handle for emergency exits as per EN 179: 2002-06

5089
Stainless steel metal frame lever handle
p.149

5088/5616 CF
Stainless steel window handle
p.220

8500
Stainless steel window drive
p.241

2.1 Lever handle

Stainless steel lever handle
5090 Emerald

EN 1906
KL 3/4

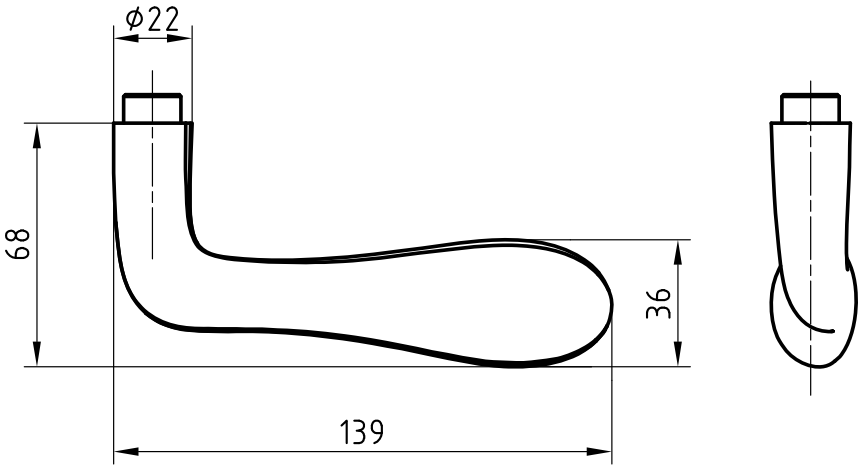

Product profile
Commercial buildings, administrative centres and superior quality residential developments

Standard version
- Lever handle length 139 mm, ø 22 mm
- Projection 68 mm
- Square spindle 8 mm
- Solid satin stainless steel
- Handing to be specified
- 16 mm guide for Glutz glide / needle bearing (NL) / easyfix®
- Picture shows handle with 5620C rose

Options
- Polished stainless steel
- RAL lacquered
- PVD lacquered
- Square spindle 8,5 mm or 9 mm
- 16 mm guide for Glutz twin glide
- Category of use class 4, EN 1906: 2002-05

Quality standard
- Category of use class 3, EN 1906: 2002-05
- Tested for use in fire-rated and smoke protection doors to DIN 18273: 1997-12

5091/5616 CF
Stainless steel window handle
p.222

8500
Stainless steel window drive
p.241

2.1 Lever handle

Stainless steel lever handle
5092 München

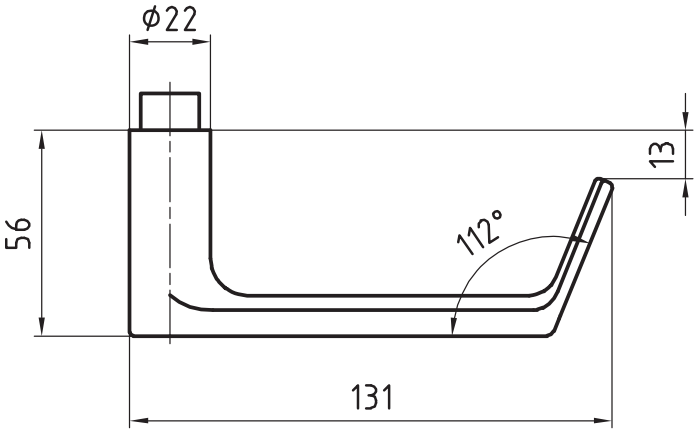

Product profile
Commercial buildings, administrative centres and superior quality residential developments

Standard version
- Lever handle length 131 mm, ø 22 mm
- Projection 56 mm
- Square spindle 8 mm
- Solid satin stainless steel
- 16 mm guide for Glutz glide / needle bearing (NL) / easyfix®
- Picture shows handle with 5620C rose

Options
- Polished stainless steel
- RAL lacquered
- PVD lacquered
- Square spindle 8,5 mm or 9 mm
- 16 mm guide for Glutz twin glide
- Version for narrow stile doors
- Category of use class 4, EN 1906: 2002-05

Quality standard
- Category of use class 3, EN 1906: 2002-05
- Tested for use in fire-rated and smoke protection doors to DIN 18273: 1997-12
- Admitted, combined with the appropriate lock as lever handle for emergency exits as per EN 179: 2002-06

5092/5616 CF
Stainless steel window handle
p.223

8500
Stainless steel window drive
p.241

2.1 Lever handle

Stainless steel lever handle
5093 George

EN 1906
KL 3/4

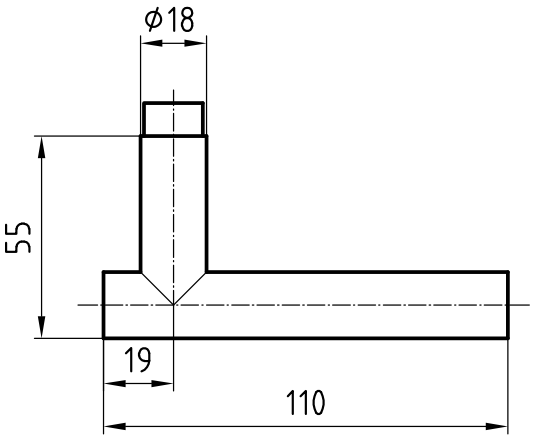

Product profile
Residential construction

Standard version
- Lever handle length 110 mm, ø 18 mm
- Projection 55 mm
- Square spindle 8 mm
- Satin stainless steel
- 16 mm guide for Glutz glide / needle bearing (NL) / easyfix®
- Picture shows handle with 5620C rose

Options
- Polished stainless steel
- RAL lacquered
- PVD lacquered
- Square spindle 8,5 mm or 9 mm
- Category of use class 4, EN 1906: 2002-05

Quality standard
- Category of use class 3, EN 1906: 2002-05
- Tested for use in fire-rated and smoke protection doors to DIN 18273: 1997-12

5094
Stainless steel lever handle
p.57

5093/5616 CF
Stainless steel window handle
p.224

8500
Stainless steel window drive
p.241

2.1 Lever handle

Stainless steel lever handle
5094 Cape Town

EN 1906
KL 3/4

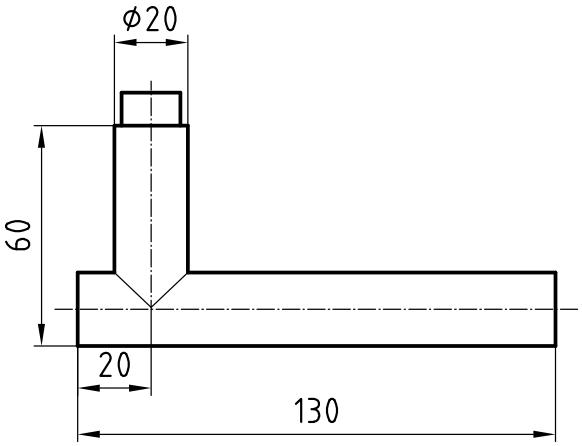

Product profile
Commercial buildings, administrative centres and superior quality residential developments

Standard version
- Lever handle length 130 mm, ø 20 mm
- Projection 60 mm
- Square spindle 8 mm
- Satin stainless steel
- 16 mm guide for Glutz glide / needle bearing (NL) / easyfix®
- Picture shows handle with 5620C rose

Options
- Polished stainless steel
- RAL lacquered
- PVD lacquered
- Square spindle 8,5 mm or 9 mm
- 16 mm guide for Glutz twin glide
- Version for narrow stile doors
- Category of use class 4, EN 1906: 2002-05

Quality standard
- Category of use class 3, EN 1906: 2002-05
- Tested for use in fire-rated and smoke protection doors to DIN 18273: 1997-12

5093
Stainless steel lever handle
p.56

5094/5616 CF
Stainless steel window handle
p.225

8500
Stainless steel window drive
p.241

2.1 Lever handle

Stainless steel lever handle
5096 Baar

EN 179

EN 1906
KL 3/4

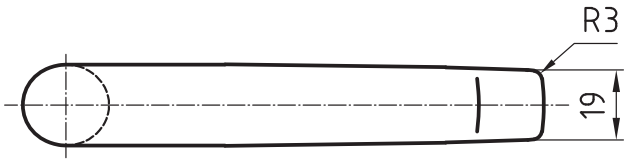

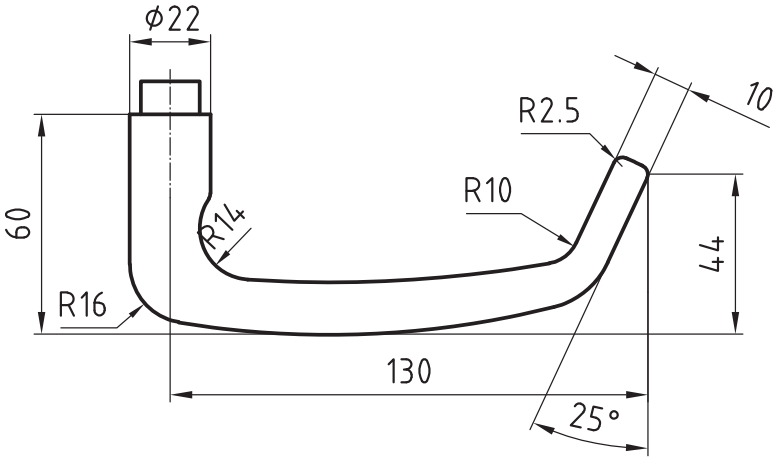

Product profile
Commercial buildings, administrative centres and superior quality residential developments

Standard version
- Lever handle length 141 mm, ø 22 mm
- Projection 60 mm
- Square spindle 8 mm
- Solid satin stainless steel
- 16 mm guide for Glutz glide / needle bearing (NL) / easyfix®
- Picture shows handle with 5620C rose

Options
- Polished stainless steel
- RAL lacquered
- PVD lacquered
- Square spindle 8,5 mm or 9 mm
- 16 mm guide for Glutz twin glide
- Version for narrow stile doors
- Category of use class 4, EN 1906: 2002-05

Quality standard
- Category of use class 3, EN 1906: 2002-05
- Tested for use in fire-rated and smoke protection doors to DIN 18273: 1997-12
- Admitted, combined with the appropriate lock as lever handle for emergency exits as per EN 179: 2002-06

5060
Stainless steel lever handle
p.37

5060/5616 CF
Stainless steel window handle
p.208

8500
Stainless steel window drive
p.241

2.1 Lever handle

Stainless steel lever handle
5098 Olten

EN 179

EN 1906
KL 3/4

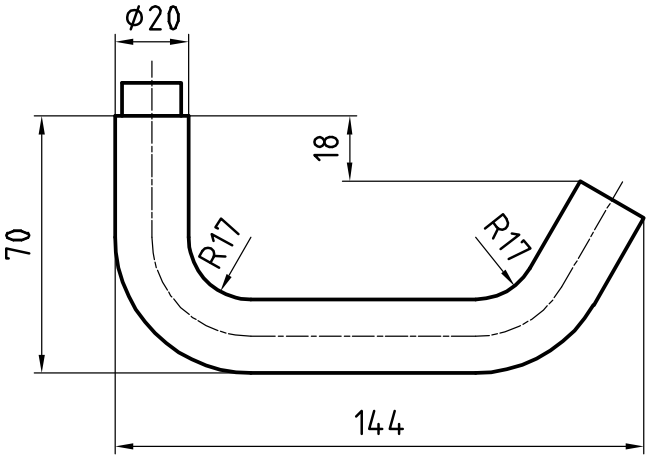

Product profile
Commercial buildings, administrative centres and superior quality residential developments

Standard version
- Lever handle length 144 mm, ø 20 mm
- Projection 70 mm
- Square spindle 8 mm
- Satin stainless steel
- 16 mm guide for Glutz glide / needle bearing (NL) / easyfix®
- Picture shows handle with 5620C rose

Options
- Polished stainless steel
- RAL lacquered
- PVD lacquered
- Square spindle 8,5 mm or 9 mm
- 16 mm guide for Glutz twin glide
- Category of use class 4, EN 1906: 2002-05

Quality standard
- Category of use class 3, EN 1906: 2002-05
- Tested for use in fire-rated and smoke protection doors to DIN 18273: 1997-12
- Admitted, combined with the appropriate lock as lever handle for emergency exits as per EN 179: 2002-06

50100
Set in stainless steel
p.71

51100
Set in stainless steel
p.72

52100
Stainless steel window handle
p.73

2.1 Lever handle

Product profile
Residential construction

Standard version
- Lever handle length 133 mm, ø 18 mm
- Projection 57 mm
- Square spindle 8 mm
- Satin stainless steel
- 16 mm guide for Glutz glide / needle bearing (NL) / easyfix®
- Picture shows handle with 5620C rose

Options
- Polished stainless steel
- RAL lacquered
- PVD lacquered
- Square spindle 8,5 mm or 9 mm
- Category of use class 4, EN 1906: 2002-05

Quality standard
- Category of use class 3, EN 1906: 2002-05
- Tested for use in fire-rated and smoke protection doors to DIN 18273: 1997-12

Stainless steel lever handle
5099 Helsinki

EN 1906
KL 3/4

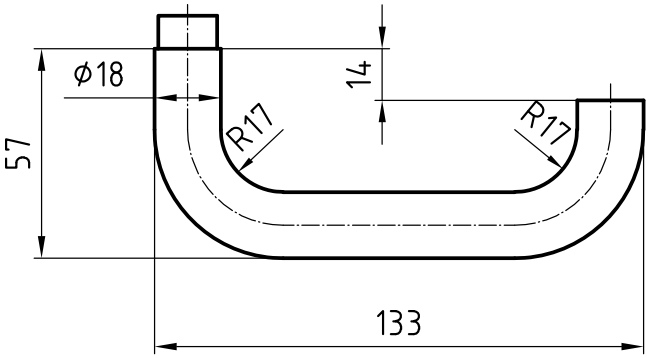

5064
Stainless steel lever handle
p.40

5065
Stainless steel lever handle
p.41

5099/5616 CF
Stainless steel window handle
p.226

8500
Stainless steel window drive
p.241

2.1 Lever handle

Stainless steel lever handle
5130 Vicenza III

EN 1906
KL 3/4

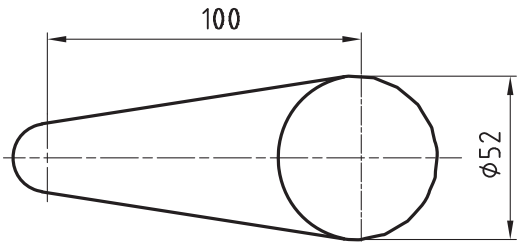

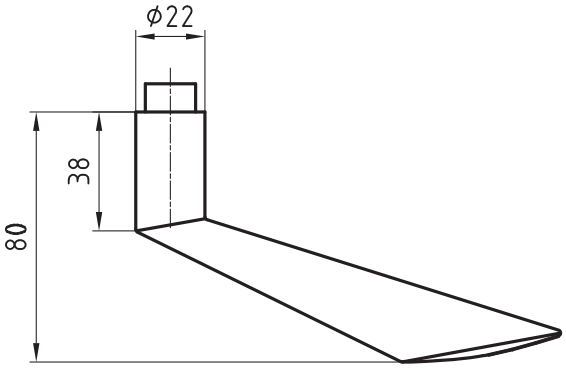

Product profile
Commercial buildings, administrative centres and superior quality residential developments

Standard version
- Lever handle length 137 mm, ø 22 mm
- Projection 80 mm
- Square spindle 9 mm
- Solid satin stainless steel
- 16 mm guide for Glutz glide / needle bearing (NL) / easyfix®
- Picture shows handle with 5620C rose

Options
- Polished stainless steel
- RAL lacquered
- PVD lacquered
- Square spindle 8 mm or 8,5 mm
- 16 mm guide for Glutz twin glide
- Category of use class 4, EN 1906: 2002-05

Quality standard
- Category of use class 3, EN 1906: 2002-05
- Tested for use in fire-rated and smoke protection doors to DIN 18273: 1997-12

5030
Stainless steel lever handle
p.21

5033
Stainless steel lever handle
p.22

5031/5616 CF
Stainless steel window handle
p.196

5032-280/5619K
Stainless steel handle PSK + HST
p.232

5843
Stainless steel door knob
p.80

2.1 Lever handle

Stainless steel lever handle
5154 Stockholm

EN 179

EN 1906
KL 3/4

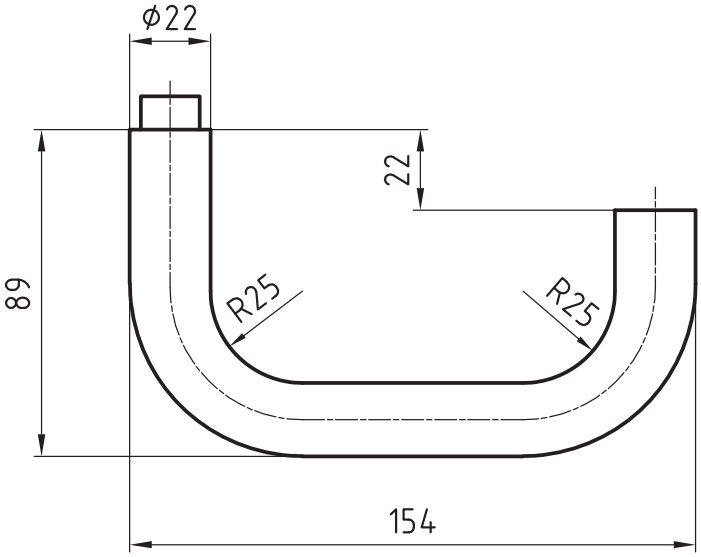

Product profile
Hospitals, commercial buildings, administrative centres

Standard version
- Lever handle length 154 mm, ø 22 mm
- Projection 89 mm
- Square spindle 9 mm
- Satin stainless steel
- 16 mm guide for Glutz glide / needle bearing (NL) / easyfix®
- Picture shows handle with 5620C rose

Options
- Polished stainless steel
- RAL lacquered
- PVD lacquered
- Square spindle 8 mm or 8,5 mm
- 16 mm guide for Glutz twin glide
- Category of use class 4, EN 1906: 2002-05

Quality standard
- Category of use class 3, EN 1906: 2002-05
- Tested for use in fire-rated and smoke protection doors to DIN 18273: 1997-12
- Admitted, combined with the appropriate lock as lever handle for emergency exits as per EN 179: 2002-06

5054
Stainless steel lever handle
p.33

5055
Stainless steel lever handle
p.34

5155
Stainless steel lever handle
p.63

5054/5616 CF
Stainless steel window handle
p.205

8500
Stainless steel window drive
p.241

2.1 Lever handle

Stainless steel lever handle
5155 Turku

EN 179

EN 1906
KL 3/4

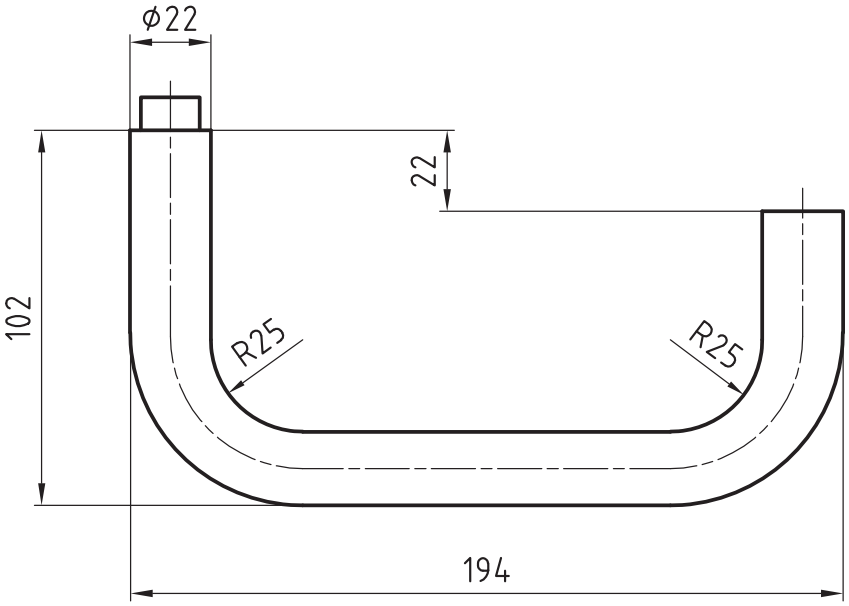

Product profile
Hospitals, commercial buildings, administrative centres

Standard version
- Lever handle length 194 mm, ø 22 mm
- Projection 102 mm
- Square spindle 9 mm
- Satin stainless steel
- 16 mm guide for Glutz glide / needle bearing (NL) / easyfix®
- Picture shows handle with 5620C rose

Options
- Polished stainless steel
- RAL lacquered
- PVD lacquered
- Square spindle 8 mm or 8,5 mm
- 16 mm guide for Glutz twin glide
- Category of use class 4, EN 1906: 2002-05

Quality standard
- Category of use class 3, EN 1906: 2002-05
- Tested for use in fire-rated and smoke protection doors to DIN 18273: 1997-12
- Admitted, combined with the appropriate lock as lever handle for emergency exits as per EN 179: 2002-06

5054
Stainless steel lever handle
p.33

5054/5616 CF
Stainless steel window handle
p.205

8500
Stainless steel window drive
p.241

5155-280/5613
Stainless steel handle PSK + HST
p.238

5155-280/5619K
Stainless steel handle PSK + HST
p.239

2.1 Lever handle

Stainless steel lever handle
5162 Stella

EN 179

EN 1906
KL 3/4

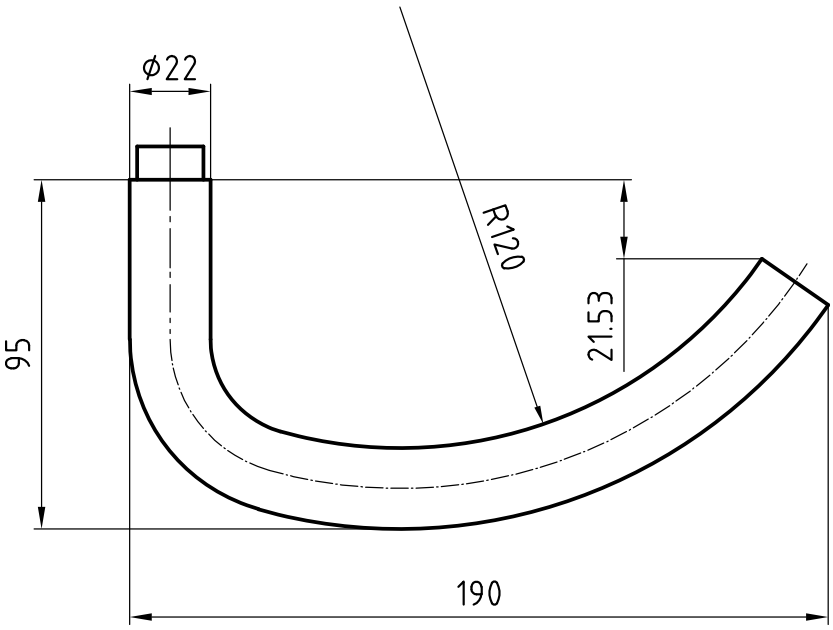

Product profile
Hospitals, commercial buildings, administrative centres

Standard version
- Lever handle length 190 mm, ø 22 mm
- Projection 95 mm
- Square spindle 9 mm
- Satin stainless steel
- 16 mm guide for Glutz glide / needle bearing (NL) / easyfix®
- Picture shows handle with 5620C rose

Options
- Polished stainless steel
- RAL lacquered
- PVD lacquered
- Square spindle 8 mm or 8,5 mm
- 16 mm guide for Glutz twin glide
- Category of use class 4, EN 1906: 2002-05

Quality standard
- Category of use class 3, EN 1906: 2002-05
- Tested for use in fire-rated and smoke protection doors to DIN 18273: 1997-12
- Admitted, combined with the appropriate lock as lever handle for emergency exits as per EN 179: 2002-06

5061
Stainless steel lever handle
p.38

5062
Stainless steel lever handle
p.39

5061/5616 CF
Stainless steel window handle
p.209

8500
Stainless steel window drive
p.241

2.1 Lever handle

Stainless steel lever handle
5287 INOX Basle

EN 1906
KL 3/4

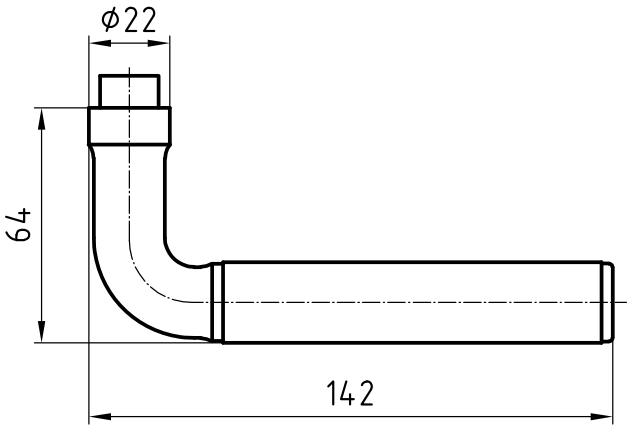

Product profile
Commercial buildings, administrative centres and superior quality residential developments

Standard version
- Lever handle length 142 mm, ø 22 mm
- Projection 64 mm
- Square spindle 9 mm
- Solid satin stainless steel shoulder
- Satin stainless steel tube
- 16 mm guide for Glutz glide / needle bearing (NL) / easyfix®
- Picture shows handle with 5620C rose

Options
- Polished stainless steel shoulder
- Square spindle 8 mm or 8,5 mm
- 16 mm guide for Glutz twin glide
- Version for narrow stile doors
- Category of use class 4, EN 1906: 2002-05
- Tubes available in:
- Polished stainless steel
- Stainless steel PVD-coated, brass coloured
- Stainless steel RAL-coated, in acc. with colour chart

Quality standard
- Category of use class 3, EN 1906: 2002-05
- Tested for use in fire-rated and smoke protection doors to DIN 18273: 1997-12

5087
Stainless steel lever handle
p.52

5087/5616 CF
Stainless steel window handle
p.219

8500
Stainless steel window drive
p.241

2.1 Lever handle

Stainless steel lever handle
6012 Linz

EN 1906
KL 3/4

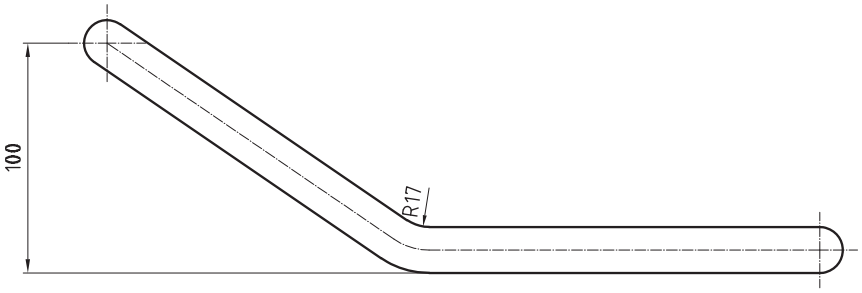

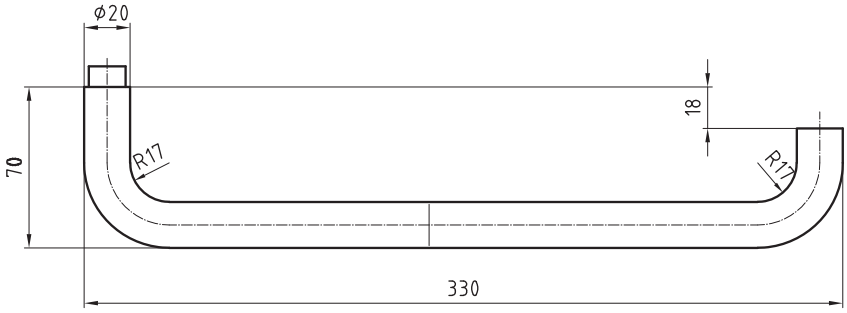

Product profile
Commercial buildings, administrative centres, schools, residential homes, hospitals

Standard version
- Lever handle length 330 mm, ø 20 mm
- Projection 70 mm
- Square spindle 8 mm
- Satin stainless steel
- 16 mm guide for Glutz glide / needle bearing (NL) / easyfix®
- Picture shows handle with 5620C rose

Options
- Polished stainless steel
- RAL lacquered
- PVD lacquered
- Square spindle 8,5 mm or 9 mm
- Category of use class 4, EN 1906: 2002-05

Quality standard
- Category of use class 3, EN 1906: 2002-05
- Tested for use in fire-rated and smoke protection doors to DIN 18273: 1997-12

5064
Stainless steel lever handle
p.40

5064A/5616 CF
Stainless steel window handle
p.211

2.1 Lever handle

Stainless steel lever handle
6016 Durban

EN 1906
KL 3/4

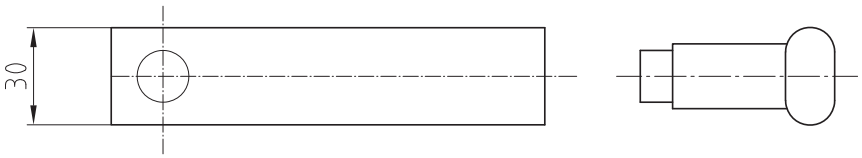

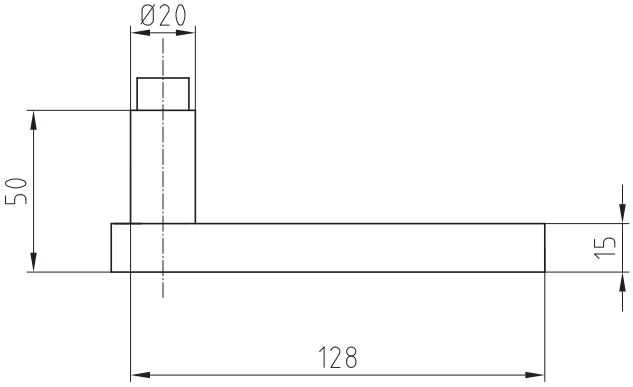

Product profile
Commercial buildings, administrative centres and superior quality residential developments

Standard version
- Lever handle length 134 mm, ø 20 mm
- Projection 50 mm
- Square spindle 8 mm
- Satin stainless steel
- 16 mm guide for Glutz glide / needle bearing (NL) / easyfix®
- Picture shows handle with 5622C rose

Options
- Polished stainless steel
- RAL lacquered
- PVD lacquered
- Square spindle 8,5 mm or 9 mm
- 16 mm guide for Glutz twin glide
- Version for narrow stile doors
- Category of use class 4, EN 1906: 2002-05

Quality standard
- Category of use class 3, EN 1906: 2002-05
- Tested for use in fire-rated and smoke protection doors to DIN 18273: 1997-12

6031
Stainless steel lever handle
p.70

6032
Stainless steel metal frame lever handle
p.153

6016-280/6143
Stainless steel handle PSK + HST
p.240

2.1 Lever handle

Standard version
- Turn 82 mm, ø 18 mm
- Projection 53 mm
- Square spindle 8 mm
- 16 mm guide for Glutz glide / needle bearing (NL) / easyfix®
- Satin stainless steel
- Picture shows turn with 5618C

Options
- Polished stainless steel
- Square spindle 8,5 mm or 9 mm
- Category of use class 4, EN 1906: 2002-05

Quality standard
- Category of use class 3, EN 1906: 2002-05

Stainless steel turn
5715

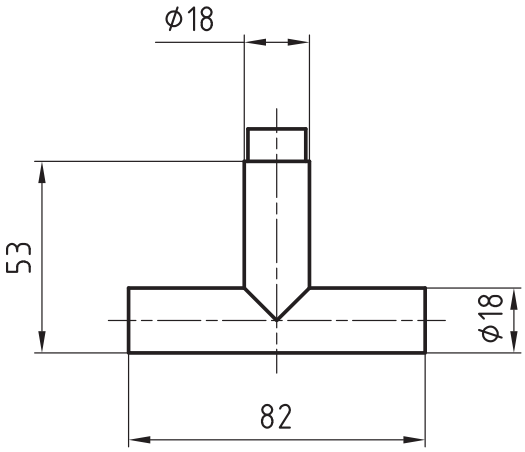

5715/5616 CF
Stainless steel window turn
p.227

2.1 Lever handle

Stainless steel turn
6030

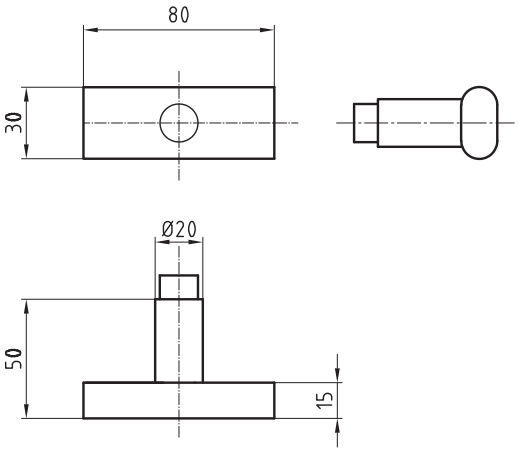

Standard version
- Turn 80 mm, ø 30 mm
- Projection 50 mm
- Square spindle 8 mm
- 16 mm guide for Glutz glide / needle bearing (NL) / easyfix®
- Satin stainless steel
- Picture shows turn with 5622C rose

Options
- Polished stainless steel
- Square spindle 8,5 mm or 9 mm
- Category of use class 4, EN 1906: 2002-05

Quality standard
- Category of use class 3, EN 1906: 2002-05

2.1 Lever handle

Stainless steel lever handle
6031 Westridge

EN 179

EN 1906
KL 3/4

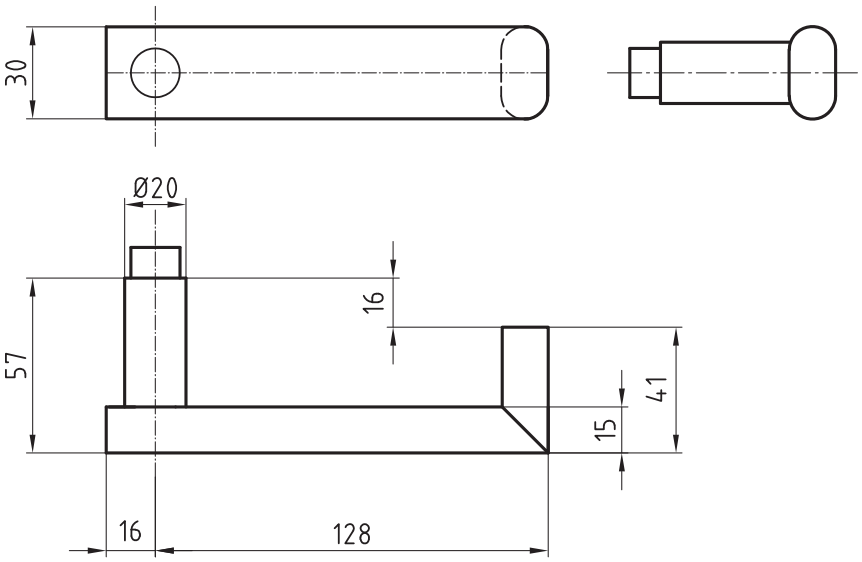

Product profile
Commercial buildings, administrative centres and superior quality residential developments

Standard version
- Lever handle length 144 mm, ø 30 mm
- Projection 57 mm
- Square spindle 8 mm
- Satin stainless steel
- 16 mm guide for Glutz glide / needle bearing (NL) / easyfix®
- Picture shows handle with 5622C rose

Options
- Polished stainless steel
- RAL lacquered
- PVD lacquered
- Square spindle 8,5 mm or 9 mm
- 16 mm guide for Glutz twin glide
- Version for narrow stile doors
- Category of use class 4, EN 1906: 2002-05

Quality standard
- Category of use class 3, EN 1906: 2002-05
- Tested for use in fire-rated and smoke protection doors to DIN 18273: 1997-12
- Admitted, combined with the appropriate lock as lever handle for emergency exits as per EN 179: 2002-06

6016
Stainless steel lever handle
p.67

6032
Stainless steel metal frame lever handle
p.153

6016-280/6143
Stainless steel handle PSK + HST
p.240

6030
Stainless steel turn
p.69

2.2 Devices for residential application

Product profile
Residential construction

Standard version
- Pair of lever handles
- Lever handle length 125 mm, ø 18 mm
- Projection 57 mm
- Square spindle 8 mm x 79 mm
- Satin stainless steel
- 16 mm guide
- Pair of back plates
- Length 217 mm
- Width 36 mm
- Thickness 2 mm
- Satin stainless steel
- Packed in complete sets

Cutout
- 50100.0 blank
- 50100.1 BB standard keyhole
- 50100.2 RZ round cylinder
- 50100.3 PZ profile cylinder
- 50100.4 WC privacy function

Set in stainless steel
50100

51100
Set in stainless steel
p.72

52100
Stainless steel window handle
p.73

2.2 Devices for residential application

Set in stainless steel
51100

Product profile
Residential construction

Standard version
- Pair of lever handles
- Lever handle length 125 mm, ø 18 mm
- Projection 57 mm
- Square spindle 8 mm x 79 mm
- Satin stainless steel
- 16 mm guide
- Escutcheon pair
- Clip on rose
- ø 53 mm
- Projection 8 mm
- Satin stainless steel
- 16 mm guide
- Base plate on one side with guided cam CN
- Base plate on one side with threaded cam M4 CG
- Fixing centres 38 mm
- Packed in complete sets
- With screws for doors 40 mm

Cutout
- 51100.0 blank
- 51100.1 BB standard keyhole
- 51100.2 RZ round cylinder
- 51100.3 PZ profile cylinder
- 51100.4 WC privacy function

50100
Set in stainless steel
p.71

52100
Stainless steel window handle
p.73

Stainless steel window handle
52100

Product profile
Residential construction

Standard version
- Window handle 125 mm
- Satin stainless steel
- 4 x 90° stop
- Left/right applicable
- Square spindle 7x32mm
- Rose to clip 72,5 x 30 x 13 mm
- 72x29x12 mm
- Projection 69 mm
- Fixing centres 43 mm
- Studs ø 9,5/12 mm
- Suitable for all tilt and turn systems

50100
Set in stainless steel
p.71

51100
Set in stainless steel
p.72

2.3 Door knobs

Stainless steel door knob
5825

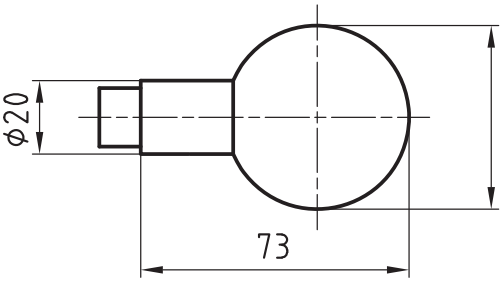

Standard version
- ø 50 mm
- Projection 73 mm
- 16 mm guide for fixing dead
- Inside thread M10
- Satin stainless steel
- Picture shows knob with 5620C rose

Options
- Polished stainless steel
- ø 60 mm, projection 83 mm
- RAL lacquered
- PVD lacquered
- 16 mm guide for Glutz glide / needle bearing (NL) / easyfix®
- Prepared for 8 mm, 8.5 mm or 9 mm square spindle

5825E
Stainless steel metal frame door knob
p.154

2.3 Door knobs

Standard version
- ø 53 mm
- Projection 41 mm
- 16 mm guide for fixing dead
- Inside thread M10
- Satin stainless steel
- Picture shows knob with 5620C rose

Options
- Polished stainless steel
- ø 60 mm
- RAL lacquered
- PVD lacquered
- 16 mm guide for Glutz glide / needle bearing (NL) / easyfix®
- Prepared for 8 mm, 8.5 mm or 9 mm square spindle

Stainless steel door knob
5827

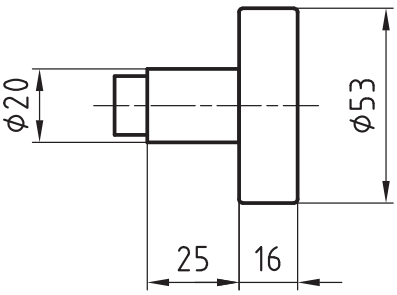

5830
Stainless steel metal frame door knob
p.155

2.3 Door knobs

Stainless steel door knob
5835 Sapphire

Standard version
- ø 60 mm
- Projection 40.5 mm
- Fixed on base plate
- Inside thread M10
- Satin stainless steel
- Handing to be specified
- Picture shows knob with 5390C

Options
- Polished stainless steel

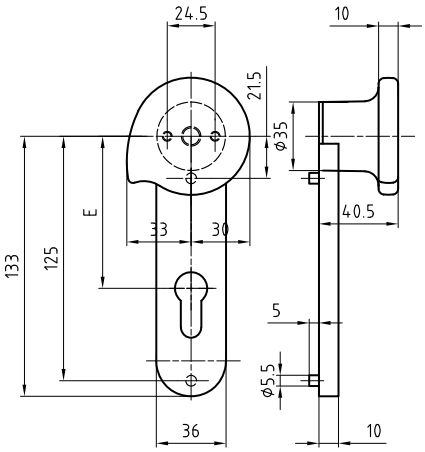

5080
Stainless steel lever handle
p.49

5085/5616 CF
Stainless steel window handle
p.218

8500
Stainless steel window drive
p.241

5390C
Stainless steel short plate to clips
p.117

2.3 Door knobs

Standard version
- ø 53 mm
- Projection 40 mm
- 16 mm guide for fixing dead
- Inside thread M10
- Solid satin stainless steel
- Picture shows knob with 5620C rose

Options
- Polished stainless steel
- RAL lacquered
- PVD lacquered
- 16 mm guide for Glutz glide / needle bearing (NL) / easyfix®
- Prepared for 8 mm, 8.5 mm or 9 mm square spindle

Stainless steel door knob
5836

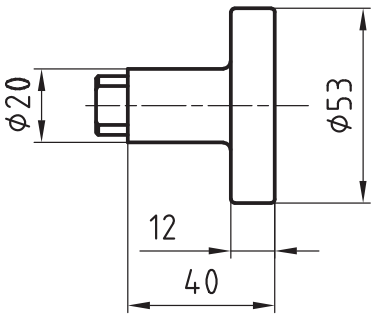

5830
Stainless steel metal frame door knob
p.155

5838
Stainless steel metal frame door knob
p.156

5839
Stainless steel metal frame door knob
p.157

2.3 Door knobs

Stainless steel door knob
5837

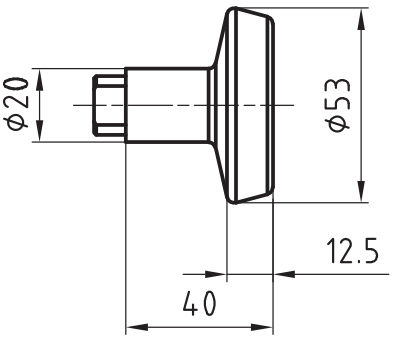

Standard version
- ø 53 mm
- Projection 40 mm
- 16 mm guide for fixing dead
- Inside thread M10
- Solid satin stainless steel
- Picture shows knob with 5620C rose

Options
- Polished stainless steel
- RAL lacquered
- PVD lacquered
- 16 mm guide for Glutz glide / needle bearing (NL) / easyfix®
- Prepared for 8 mm, 8.5 mm or 9 mm square spindle

5838
Stainless steel metal frame door knob
p.156

5839
Stainless steel metal frame door knob
p.157

2.3 Door knobs

Standard version
- 53x53x12 mm
- Projection 40 mm
- 16 mm guide for fixing dead
- Inside thread M10
- Solid satin stainless steel
- Picture shows knob with 5622C rose

Options
- Polished stainless steel
- RAL lacquered
- PVD lacquered

Stainless steel door knob
5842

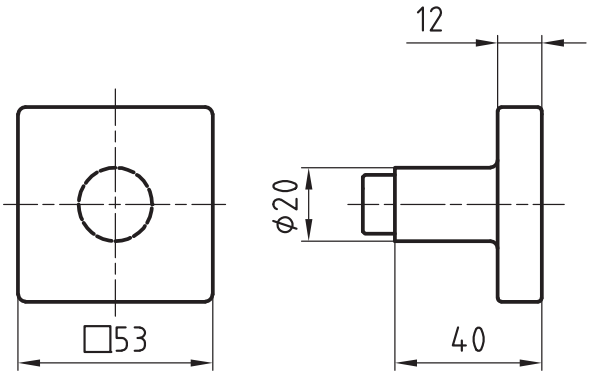

5840
Stainless steel metal frame door knob
p.158

5841
Stainless steel metal frame door knob
p.159

2.3 Door knobs

Stainless steel door knob
5843

Standard version
- ø 58 mm
- Projection 55 mm
- 16 mm guide for fixing dead
- Inside thread M10
- Solid satin stainless steel
- Picture shows knob with 5620C rose

Options
- Polished stainless steel
- RAL lacquered
- PVD lacquered

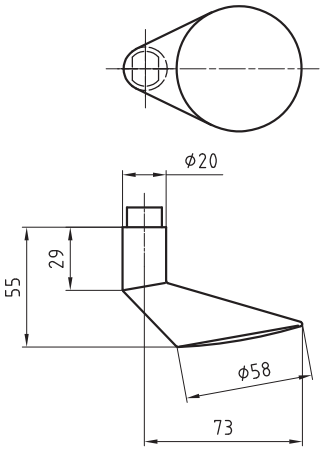

5030
Stainless steel lever handle
p.21

5130
Stainless steel lever handle
p.61

5033
Stainless steel lever handle
p.22

5031/5616 CF
Stainless steel window handle
p.196

5032-280/5619K
Stainless steel handle PSK + HST
p.232

Product overview

3. Roses and escutcheons

3.1 Roses

5620C
p. 85

5380C
p. 86

5621
p. 87

5381
p. 88

5622C
p. 89

5322C
p. 90

5623C
p. 91

5323C
p. 92

5624C
p. 93

5324C
p. 94

5627
p. 95

5387
p. 96

5628
p. 97

5388
p. 98

6140
p. 99

6141
p. 100

5325S
p. 101

5326S
p. 102

3.2 Long plates

5335C
p. 103

6147C
p. 104

5341
p. 105

5341S
p. 106

5345
p. 107

5345S
p. 108

5345E
p. 109

5347C
p. 110

5348C
p. 111

5369
p. 112

5369S
p. 113

5444
p. 114

3.3 Short plates

5349C
p. 115

5350C
p. 116

5390C Sapphire
p. 117

6120
p. 118

5374
p. 119

3.4 Backplates and kickplates

5370
p. 120

5371
p. 121

5372C
p. 122

5375
p. 123

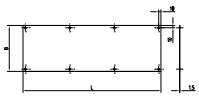

6500
p. 124

3.5 Door stops

5945.0
p. 125

5945A
p. 126

5946
p. 127

5950
p. 128

3.6 Various

TWS 70045.10
p. 129

TWS 70046.10
p. 129

TWS 70047.10
p. 129

TWS 70048.10
p. 129

9001
p. 129

9002
p. 129

3.1 Roses

Escutcheons and roses for bathrooms

All Glutz escutcheons and roses are available in toilet version 4.

A red/green or optional red/white indicator is fitted on the outside of the door. The set also features an emergency release slot. The door is opened on the inside by a choice of different elegantly designed turns.

The spindles used to operate the toilet lock are available in a variety of dimensions. Sets are fitted with 7 mm spindles as standard. 6 mm and 8 mm pins are optionally available.

5380/5811

5380/5812

5380/5711

5380/5712

5380/5713

5380/5716

5380/5717

3.1 Roses

Stainless steel clip on rose
5620C

Standard version
- Clip on rose
- ø 53 mm
- Projection 8 mm
- Satin stainless steel
- 16 mm guide for Glutz glide
- Base plate on one side with guided cam CN
- Base plate on one side with threaded cam M4 CG
- Fixing centres 38 mm

Cutout
- 5620.19C cutout for handles ø 18 mm
- 5620.21C cutout for handles ø 20 mm
- 5620.23C cutout for handles ø 22 mm

Options
- Polished stainless steel
- RAL lacquered
- PVD lacquered
- Glutz needle bearing 16 mm
- 16 mm twin, semi-outside
- 16 mm twin, outside
- Glutz glide or needle bearing
- Glutz easyfix®
- Knob fixing

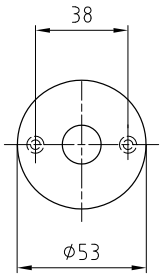

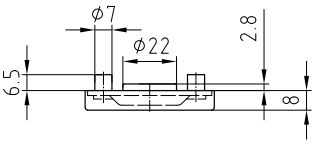

5380C
Stainless steel cylinder clip on escutcheon
p.86

5380.4 C
Stainless steel escutch-eons for bathrooms
p.84

3.1 Roses

Stainless steel cylinder clip on escutcheon
5380C

Standard version
- Clip on escutcheon
- ø 53 mm
- Projection 8 mm
- Satin stainless steel
- Base plate on one side with guided cam CN
- Base plate on one side with threaded cam M4 CG
- Fixing centres 38 mm

Cutout
- 5380.0C blind
- 5380.1C BB standard keyhole
- 5380.2C RZ round cylinder
- 5380.3C PZ profile cylinder
- 5380.4C WC privacy function
- 5380.8C PRZ
- 5380.9C OVZ oval cylinder

Options
- Polished stainless steel
- RAL lacquered
- PVD lacquered

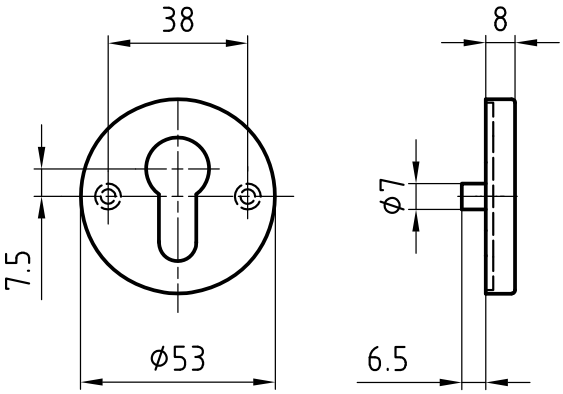

5620C
Stainless steel clip on rose
p.85

5380.4 C
Stainless steel escutch-eons for bathrooms
p.84

3.1 Roses

Stainless steel rose
5621

Standard version
- ø 53 mm
- Satin stainless steel
- Projection 8 mm
- 16 mm guide for Glutz glide
- Fixing centres 38 mm

Options
- Polished stainless steel
- RAL lacquered
- PVD lacquered
- Glutz needle bearing 16 mm
- 16 mm twin, semi-outside
- Glutz easyfix®
- Knob fixing

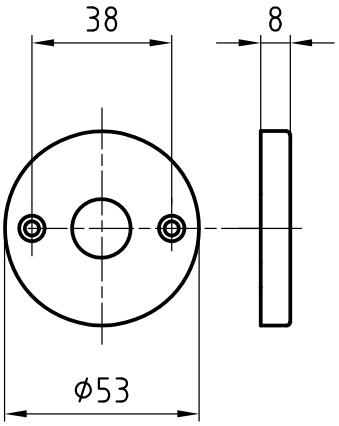

5381
Stainless steel cylinder escutcheon
p.88

5381.4
Stainless steel escutch-eons
p.84

Stainless steel cylinder escutcheon
5381

Standard version
- ø 53 mm
- Projection 8 mm
- Satin stainless steel
- Fixing centres 38 mm

Cutout
- 5381.0 blind
- 5381.1 BB standard keyhole
- 5381.2 RZ round cylinder
- 5381.3 PZ profile cylinder
- 5381.4 WC privacy function
- 5381.8 PRZ
- 5381.9 OVZ oval cylinder

Options
- Polished stainless steel
- RAL lacquered
- PVD lacquered

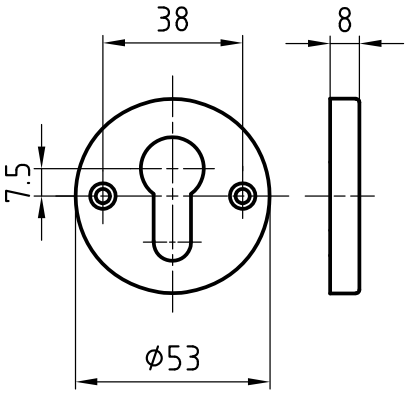

5621
Stainless steel rose
p.87

5381.4
Stainless steel escutch-eons
p.84

3.1 Roses

Stainless steel clip on rose
5622C

Standard version
- Clip on rose
- 53 x 53 mm
- Projection 8 mm
- Satin stainless steel
- 16 mm guide for Glutz glide
- Base plate on one side with guided cam CN
- Base plate on one side with threaded cam M4 CG
- Fixing centres 38 mm

Cutout
- 5622.19C cutout for handles ø 18 mm
- 5622.21C cutout for handles ø 20 mm
- 5622.23C cutout for handles ø 22 mm

Options
- Polished stainless steel
- RAL lacquered
- PVD lacquered
- Glutz needle bearing 16 mm
- 16 mm twin, semi-outside
- 16 mm twin, outside
- Glutz glide or needle bearing
- Glutz easyfix®
- Knob fixing

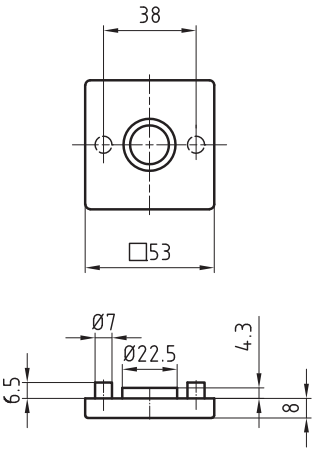

5322C
Stainless steel cylinder clip on escutcheon
p.90

5623C
Stainless steel clip on rose
p.91

5323C
Stainless steel cylinder clip on escutcheon
p.92

Stainless steel cylinder clip on escutcheon
5322C

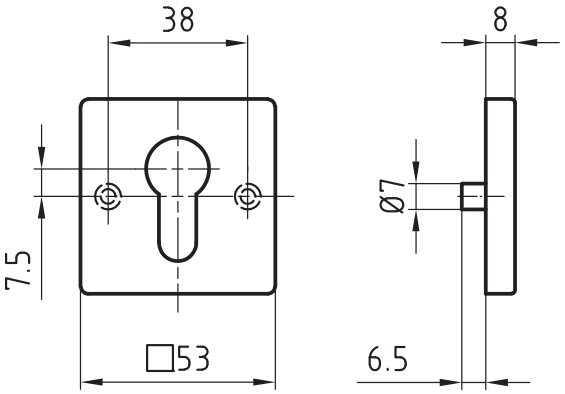

Standard version
- Clip on escutcheon
- 53 x 53 mm
- Projection 8 mm
- Satin stainless steel
- Base plate on one side with guided cam CN
- Base plate on one side with threaded cam M4 CG
- Fixing centres 38 mm

Cutout
- 5322.0C blind
- 5322.1C BB
- 5322.2C RZ
- 5322.3C PZ
- 5322.4C WC
- 5322.8C PRZ
- 5322.9C OVZ

Options
- Polished stainless steel
- RAL lacquered
- PVD lacquered

5622C
Stainless steel clip on rose
p.89

5623C
Stainless steel clip on rose
p.91

5323C
Stainless steel cylinder clip on escutcheon
p.92

3.1 Roses

Stainless steel clip on rose
5623C

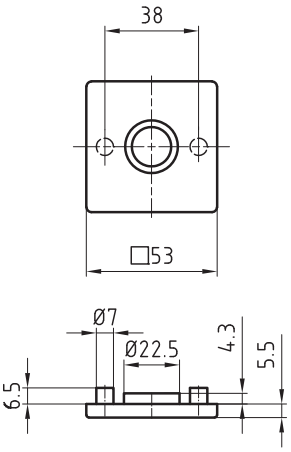

Standard version
- Clip on rose
- 53 x 53 mm
- Projection 5.5 mm
- Satin stainless steel
- 16 mm guide for Glutz glide
- Base plate on one side with guided cam CN
- Base plate on one side with threaded cam M4 CG
- Fixing centres 38 mm

Cutout
- 5623.19C cutout for handles ø 18 mm
- 5623.21C cutout for handles ø 20 mm
- 562323C cutout for handles ø 22 mm

Options
- Polished stainless steel
- RAL lacquered
- PVD lacquered
- Glutz needle bearing 16 mm
- 16 mm twin, semi-outside
- 16 mm twin, outside
- Glutz glide or needle bearing
- Glutz easyfix®
- Knob fixing

5323C
Stainless steel cylinder clip on escutcheon
p.92

5622C
Stainless steel clip on rose
p.89

5322C
Stainless steel cylinder clip on escutcheon
p.90

Stainless steel cylinder clip on escutcheon
5323C

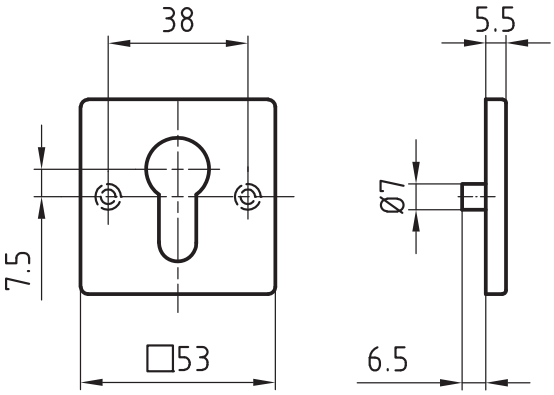

Standard version
- Clip on escutcheon
- 53 x 53 mm
- Projection 5.5 mm
- Satin stainless steel
- Base plate on one side with guided cam CN
- Base plate on one side with threaded cam M4 CG
- Fixing centres 38 mm

Cutout
- 5323.0C blind
- 5323.1C BB
- 5323.2C RZ
- 5323.3C PZ
- 5323.4C WC
- 5323.8C PRZ
- 53239C OVZ

Options
- Polished stainless steel
- RAL lacquered
- PVD lacquered

5623C
Stainless steel clip on rose
p.91

5622C
Stainless steel clip on rose
p.89

5322C
Stainless steel cylinder clip on escutcheon
p.90

3.1 Roses

Stainless steel clip on rose
5624C

Standard version
- Clip on rose
- ø 53 mm
- Projection 5.5 mm
- Satin stainless steel
- 16 mm guide for Glutz glide
- Base plate on one side with guided cam CN
- Base plate on one side with threaded cam M4 CG
- Fixing centres 38 mm

Cutout
- 5624.19C cutout for handles ø 18 mm
- 5624.21C cutout for handles ø 20 mm
- 5624.23C cutout for handles ø 22 mm

Options
- Polished stainless steel
- RAL lacquered
- PVD lacquered
- Glutz needle bearing 16 mm
- 16 mm twin, semi-outside
- Glutz easyfix®
- Knob fixing

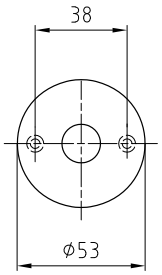

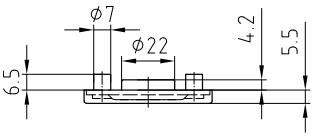

5324C
Stainless steel cylinder clip on escutcheon
p.94

5324.4 C
Stainless steel escutcheons for bathrooms
p.84

3.1 Roses

Stainless steel cylinder clip on escutcheon
5324C

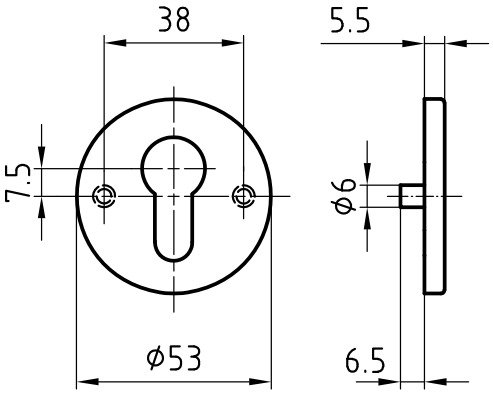

Standard version
- Clip on escutcheon
- ø 53 mm
- Projection 5.5 mm
- Satin stainless steel
- Base plate on one side with guided cam CN
- Base plate on one side with threaded cam M4 CG
- Fixing centres 38 mm

Cutout
- 5324.0C blind
- 5324.1C BB standard keyhole
- 5324.2C RZ round cylinder
- 5324.3C PZ profile cylinder
- 5324.4C WC privacy function
- 5324.8C PRZ
- 5324.9C OVZ oval cylinder

Options
- Polished stainless steel
- RAL lacquered
- PVD lacquered

5624C
Stainless steel clip on rose
p.93

5324.4 C
Stainless steel escutch-eons for bathrooms
p.84

3.1 Roses

Standard version
- ø 53 mm
- Projection 2 mm
- Satin stainless steel
- 16 mm guide for Glutz glide
- Fixing centres 38 mm

Options
- Polished stainless steel
- RAL lacquered
- PVD lacquered
- Glutz needle bearing 16 mm
- 16 mm outside
- 16 mm outside, conical
- 16 mm twin, inside
- 16 mm twin, semi-outside
- 16 mm twin, outside
- Glutz easyfix®
- Knob fixing

Stainless steel rose
5627

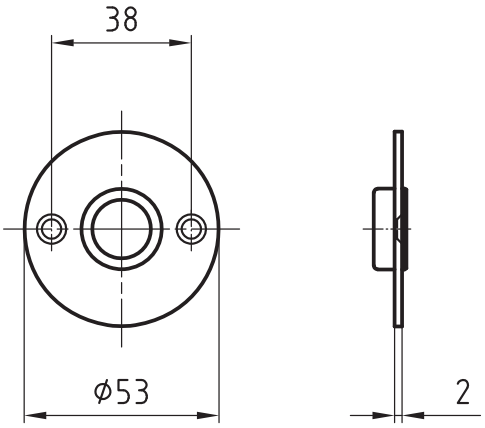

5628
Stainless steel rose
p.97

5387
Stainless steel cylinder escutcheon
p.96

5388
Stainless steel cylinder escutcheon
p.98

5387/88.4
Stainless steel escutch-eons
p.84

3.1 Roses

Standard version
- ø 53 mm
- Projection 2 mm
- Satin stainless steel
- Fixing centres 38 mm

Cutout
- 5387.0 blind
- 5387.1 BB standard keyhole
- 5387.2 RZ round cylinder
- 5387.3 PZ profile cylinder
- 5387.4 WC privacy function
- 5387.8 PRZ
- 5387.9 OVZ oval cylinder

Options
- Polished stainless steel
- RAL lacquered
- PVD lacquered

Stainless steel cylinder escutcheon
5387

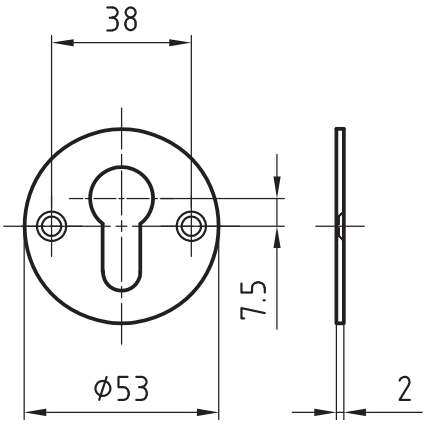

5388
Stainless steel cylinder escutcheon
p.98

5627
Stainless steel rose
p.95

5628
Stainless steel rose
p.97

5387/88.4
Stainless steel escutch-eons
p.84

3.1 Roses

Stainless steel rose
5628

Standard version
- ø 53 mm
- Projection 2 mm
- Satin stainless steel
- 16 mm guide for Glutz glide
- With 2 M4 threaded cams
- Fixing centres 38 mm

Options
- Polished stainless steel
- RAL lacquered
- PVD lacquered
- Glutz needle bearing 16 mm
- 16 mm outside, conical
- 16 mm twin, inside
- 16 mm twin, semi-outside
- 16 mm twin, outside
- Glutz easyfix®
- Knob fixing

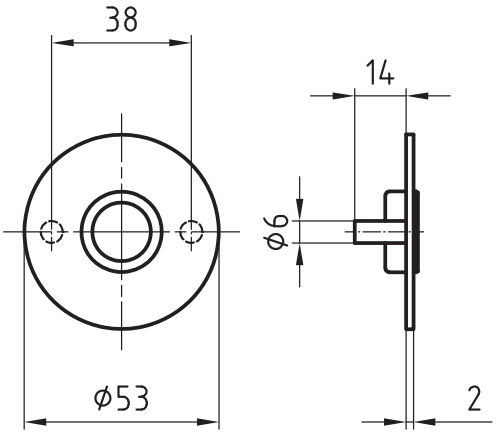

5627
Stainless steel rose
p.95

5388
Stainless steel cylinder escutcheon
p.98

5387
Stainless steel cylinder escutcheon
p.96

5387/88.4
Stainless steel escutch-eons
p.84

3.1 Roses

Standard version
- ø 53 mm
- Projection 2 mm
- Satin stainless steel
- With 2 M4 threaded cams
- Fixing centres 38 mm

Cutout
- 5388.0 blind
- 5388.1 BB standard keyhole
- 5388.2 RZ round cylinder
- 5388.3 PZ profile cylinder
- 5388.4 WC privacy function
- 5388.8 PRZ
- 5388.9 OVZ oval cylinder

Options
- Polished stainless steel
- RAL lacquered
- PVD lacquered

Stainless steel cylinder escutcheon
5388

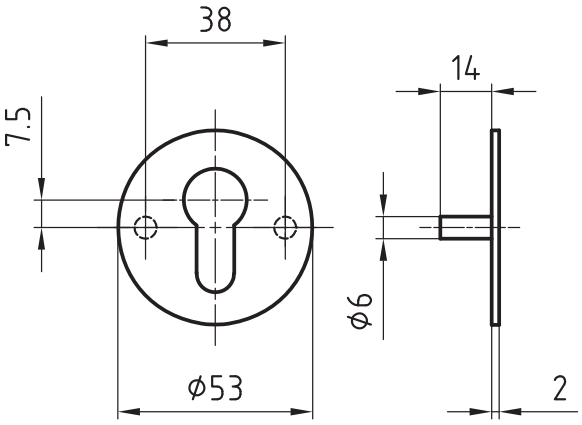

5387
Stainless steel cylinder escutcheon
p.96

5628
Stainless steel rose
p.97

5627
Stainless steel rose
p.95

5387/88.4
Stainless steel escutch-eons
p.84

Stainless steel rose
6140

Standard version
- Length 53 mm
- Width 53 mm
- Projection 3 mm
- Satin stainless steel
- 16 mm guide for Glutz glide
- Fixing holes M4
- Fixing centres 38 mm

Options
- Polished stainless steel
- RAL lacquered
- PVD lacquered
- Glutz needle bearing 16 mm
- 16 mm outside
- Glutz easyfix®
- Knob fixing
- Threaded cam M4

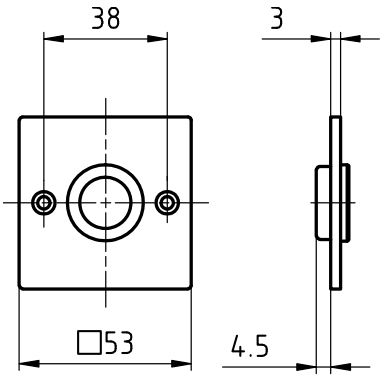

6141
Stainless steel cylinder escutcheon
p.100

6141.4
Stainless steel escutch-eons
p.84

Stainless steel cylinder escutcheon
6141

Standard version
- Length 53 mm
- Width 53 mm
- Projection 3 mm
- Satin stainless steel
- Fixing holes M4
- Fixing centres 38 mm

Cutout
- 6141.0 blind
- 6141.1 BB standard keyhole
- 6141.2 RZ round cylinder
- 6141.3 PZ profile cylinder
- 6141.4 WC privacy function
- 6141.8 PRZ
- 6141.9 OVZ oval cylinder

Options
- Polished stainless steel
- RAL lacquered
- PVD lacquered
- Threaded cam M4

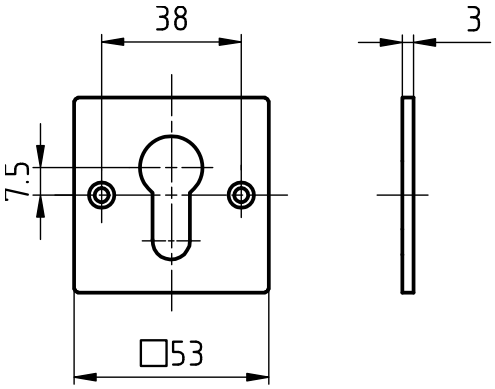

6140
Stainless steel rose
p.99

6141.4
Stainless steel escutch-eons
p.84

Stainless steel cylinder protection escutcheon
5325S

Standard version
- **Outside rose 5325S**
- Solid satin stainless steel
- ø 53 mm
- Projection 4 mm
- With threaded cam M4
- **Inside rose flat**
- Satin stainless steel
- ø 53 mm
- Projection 8 mm
- With fixing screws M4
- Fixing centres 38 mm

Cutout
- 5325.2 RZ round cylinder
- 5325.3 PZ profil cylinder

Options
- Polished stainless steel
- RAL lacquered
- PVD lacquered
- **Outside rose**
- Projection 6 mm
- Projection 8 mm
- Projection 10 mm
- Projection 12 mm
- Projection 14 mm
- Height 16 mm
- Height 18 mm
- Projection 20 mm
- **Inside rose**
- Projection 2 mm

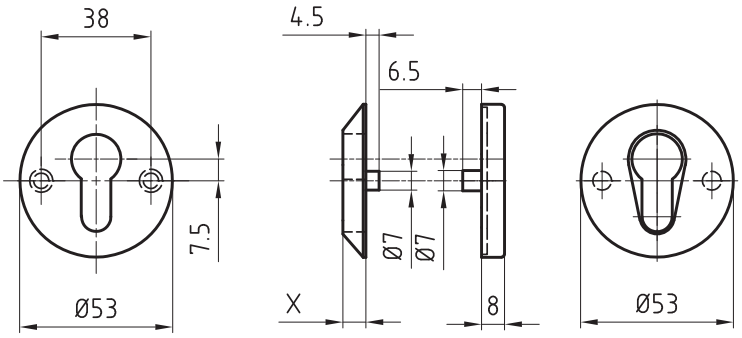

5630S
Stainless steel rose 12 mm
p.131

5330.2S-RS
Stainless steel cylinder protection rose ES 1
p.133

5330.2S-ZA
Stainless steel cylinder protection rose ES 1
p.134

5330.3S-ZA
Stainless steel cylinder protection rose ES 1
p.135

3.1 Roses

Stainless steel cylinder protection escutcheon
5326S

Standard version
- **Outside rose 5325S**
- Solid satin stainless steel
- 32 x 50 mm
- Projection 4 mm
- With threaded cam M4
- **Inside rose flat**
- Satin stainless steel
- 31 x 50 mm
- Projection 2 mm
- With fixing screws M4
- Fixing centres 20 mm

Cutout
- 5325.3 PZ profil cylinder
- 5326.3 PZ profil cylinder

Options
- Polished stainless steel
- RAL lacquered
- PVD lacquered
- **Outside rose**
- Projection 6 mm
- Projection 8 mm
- Projection 10 mm
- Projection 12 mm
- Projection 14 mm
- Height 16 mm
- Height 18 mm
- Projection 20 mm

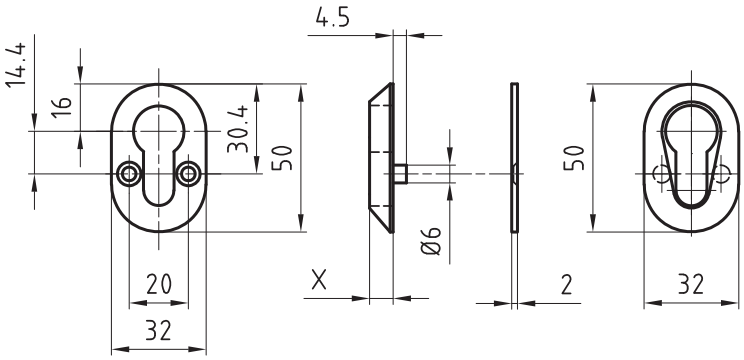

5311
Stainless steel metal frame push-on escutch-eon
p.169

5315
Stainless steel metal frame push-on escutch-eon
p.170

5316
Stainless steel metal frame push-on escutch-eon
p.171

5317
Stainless steel metal frame push-on escutch-eon
p.172

3.2 Long plates

Stainless steel long plate to clips
5335C

Standard version
- Length 250 mm
- Width 55 mm
- Projection 8 mm
- Satin stainless steel
- 16 mm guide for Glutz glide
- Base plate on one side with guided cam CN
- Base plate on one side with threaded cam M4 CG
- Fixing centres 139 mm

Cutout
- 5335.00C blind
- 5335.0C blank
- 5335.1C BB standard keyhole
- 5335.2C RZ round cylinder
- 5335.3C PZ profile cylinder
- 5335.4C WC privacy function
- 5335.8C PRZ
- 5335.9C OVZ oval cylinder
- Cutouts for lever handles
- .19 for lever handles ø 18 mm
- .21 for lever handles ø 20 mm
- .23 for lever handles ø 22 mm

Options
- Polished stainless steel
- RAL lacquered
- PVD lacquered
- Glutz needle bearing 16 mm
- 16 mm twin, semi-outside
- 16 mm twin, outside
- Glutz easyfix®
- Knob fixing

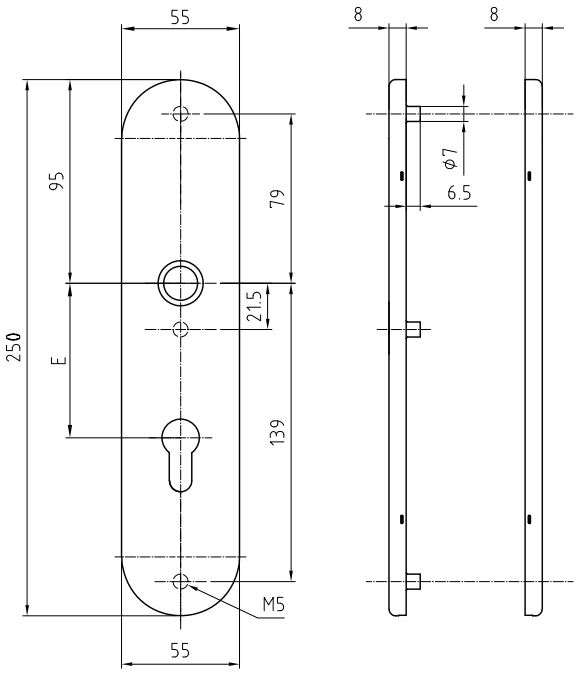

3.2 Long plates

Stainless steel long plate to clips
6147C

Standard version
- Length 250 mm
- Width 55 mm
- Projection 8 mm
- Satin stainless steel
- 16 mm guide for Glutz glide
- Base plate on one side with guided cam CN
- Base plate on one side with threaded cam M4 CG
- Fixing centres 139 mm

Cutout
- 6147.00C blind
- 6147.0C blank
- 6147.1C BB standard keyhole
- 6147.2C RZ round cylinder
- 6147.3C PZ profile cylinder
- 6147.4C WC privacy function
- 6147.8C PRZ
- 6147.9C OVZ oval cylinder
- Cutouts for lever handles
- .19 for lever handles ø 18 mm
- .21 for lever handles ø 20 mm
- .23 for lever handles ø 22 mm

Options
- Polished stainless steel
- RAL lacquered
- PVD lacquered
- Glutz needle bearing 16 mm
- 16 mm twin, semi-outside
- 16 mm twin, outside
- Glutz easyfix®
- Knob fixing

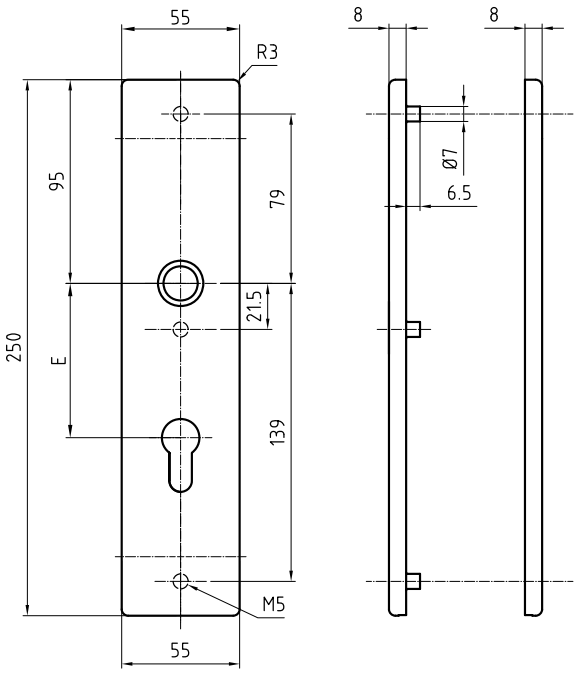

3.2 Long plates

Stainless steel long plate
5341

Standard version
- Length 210 mm
- Width 40 mm
- Projection 2 mm
- Satin stainless steel
- 16 mm guide for Glutz glide

Cutout
- 5341.00 blind
- 5341.0 blank
- 5341.1 BB standard keyhole
- 5341.2 RZ round cylinder
- 5341.3 PZ profile cylinder
- 5341.4 WC privacy function
- 5341.8 PRZ
- 5341.9 OVZ oval cylinder

Options
- Polished stainless steel
- RAL lacquered
- PVD lacquered
- Glutz needle bearing 16 mm
- 16 mm outside
- 16 mm outside, conical
- 16 mm twin, inside
- 16 mm twin, semi-outside
- 16 mm twin, outside
- Glutz easyfix®
- Tribloc suitable
- Knob fixing

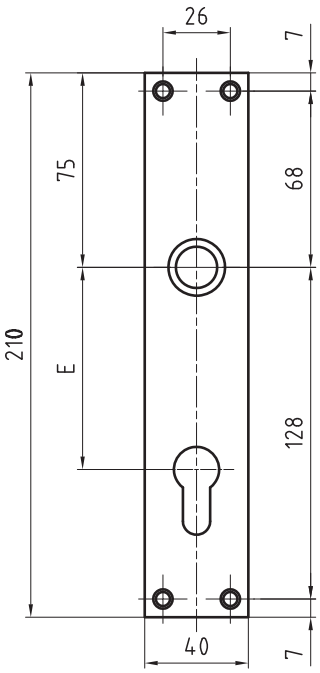

5341S
Stainless steel long plate
p.106

5341.4
Stainless steel long plate for bathrooms
p.84

3.2 Long plates

Stainless steel long plate
5341S

Standard version
- Length 210 mm
- Width 40 mm
- Projection 2 mm
- Satin stainless steel
- 16 mm guide for Glutz glide
- Outside plate with four M4 threaded cams
- Inside plate with 4 fixing holes
- For 2 mm cylinder projection

Cutout
- 5341.00S blind
- 5341 S.0 blank
- 5341.2S RZ round cylinder
- 5341.3S PZ profile cylinder

Options
- Polished stainless steel
- RAL lacquered
- PVD lacquered
- Glutz needle bearing 16 mm
- 16 mm outside
- 16 mm outside, conical
- 16 mm twin, inside
- 16 mm twin, semi-outside
- 16 mm twin, outside
- Glutz easyfix®
- Tribloc suitable
- Cylinder protection roses for cylinder projection
  RZ: 6, 8, 9, 10, 12, 15, 16, 18, 20, 22 mm
  PZ: 6, 8, 10, 12, 14, 16, 18, 20, 22 mm
- Knob fixing

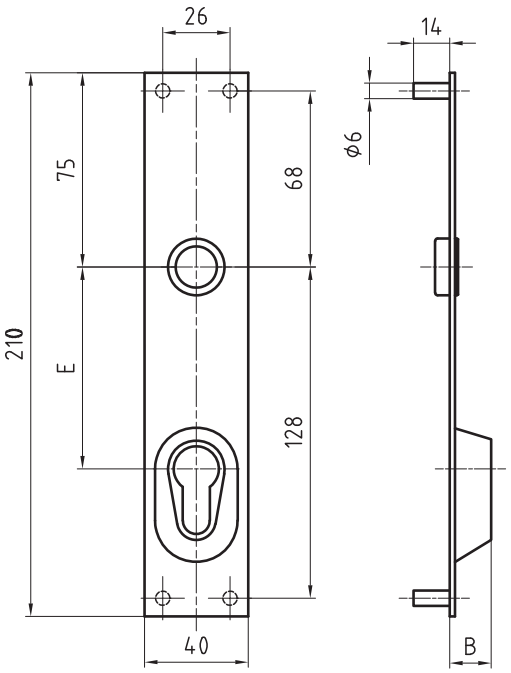

5341.4
Stainless steel long plate for bathrooms
p.84

5341
Stainless steel long plate
p.105

3.2 Long plates

Stainless steel long plate
5345

Standard version
- Length 235 mm
- Width 40 mm
- Projection 2 mm
- Satin stainless steel
- 16 mm guide for Glutz glide

Cutout
- 5345.00 blind
- 5345.0 blank
- 5345.1 BB standard keyhole
- 5345.2 RZ round cylinder
- 5345.3 PZ profile cylinder
- 5345.4 WC privacy function
- 5345.8 PRZ
- 5345.9 OVZ oval cylinder

Options
- Polished stainless steel
- RAL lacquered
- PVD lacquered
- Glutz needle bearing 16 mm
- 16 mm outside
- 16 mm outside, conical
- 16 mm twin, inside
- 16 mm twin, semi-outside
- 16 mm twin, outside
- 16 mm twin, outside, conical
- Glutz easyfix®
- Tribloc suitable
- Knob fixing

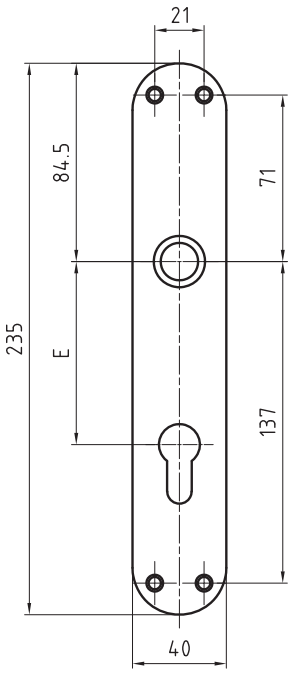

5345S
Stainless steel long plate
p.108

5345.4
Stainless steel long plate for bathrooms
p.84

5345-30
Stainless steel metal frame long plate
p.179

5345E
Stainless steel long plate
p.109

3.2 Long plates

Stainless steel long plate
5345S

Standard version
- Length 235 mm
- Width 40 mm
- Projection 2 mm
- Satin stainless steel
- 16 mm guide for Glutz glide
- Outside plate with four M4 threaded cams
- Inside plate with 4 fixing holes
- For 2 mm cylinder protection

Cutout
- 5345.00S blind
- 5345.0S blank
- 5345.2S RZ round cylinder
- 5345.3S PZ profile cylinder

Options
- Polished stainless steel
- RAL lacquered
- PVD lacquered
- Glutz needle bearing 16 mm
- 16 mm outside
- 16 mm outside, conical
- 16 mm twin, inside
- 16 mm twin, semi-outside
- 16 mm twin, outside
- 16 mm twin, outside, conical
- Glutz easyfix®
- With 5 threaded cams
- Tribloc suitable
- Cylinder protection roses for cylinder projection
  RZ: 6, 8, 9, 10, 12, 15, 16, 18, 20, 22 mm
  PZ: 6, 8, 10, 12, 14, 16, 18, 20, 22 mm
- Knob fixing

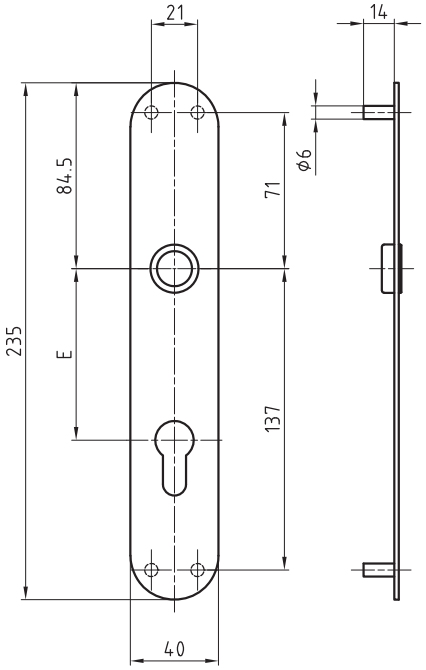

5345
Stainless steel long plate
p.107

5345.4
Stainless steel long plate for bathrooms
p.84

5345-30
Stainless steel metal frame long plate
p.179

5345E
Stainless steel long plate
p.109

3.2 Long plates

Standard version
- Length 258 mm
- Width 40 mm
- Projection 2 mm
- Satin stainless steel
- 16 mm guide for Glutz glide
- For lock 1204

Cutout
- 5345.2.2 RZ/RZ
- 5345.3.3 PZ/PZ
- 5345.2.3 RZ/PZ

Options
- Polished stainless steel
- RAL lacquered
- PVD lacquered
- Glutz needle bearing 16 mm
- 16 mm outside
- 16 mm outside, conical
- 16 mm twin, inside
- 16 mm twin, semi-outside
- 16 mm twin, outside
- 16 mm twin, outside, conical
- Glutz easyfix®
- Knob fixing

Stainless steel long plate
5345E

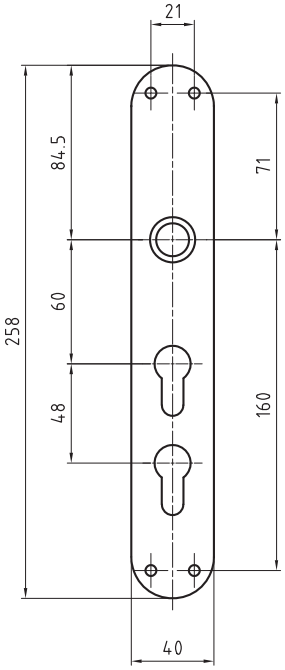

5345
Stainless steel long plate
p.107

5345S
Stainless steel long plate
p.108

5345-30
Stainless steel metal frame long plate
p.179

5345.4
Stainless steel long plate for bathrooms
p.84

3.2 Long plates

Stainless steel long plate to clips
5347C

Standard version
- Length 220 mm
- Width 40 mm
- Projection 8 mm
- Satin stainless steel
- 16 mm guide for Glutz glide
- Base plate on one side with guided cam CN
- Base plate on one side with threaded cam M4 CG
- Fixing centres 125 mm

Cutout
- 5347.00C blind
- 5347.0C blank
- 5347.1C BB standard keyhole
- 5347.2C RZ round cylinder
- 5347.3C PZ profile cylinder
- 5347.4C WC privacy function
- 5347.8C PRZ
- 5347.9C OVZ oval cylinder
- Cutouts for lever handles
- .19 for lever handles ø 18 mm
- .21 for lever handles ø 20 mm
- .23 for lever handles ø 22 mm

Options
- Polished stainless steel
- RAL lacquered
- PVD lacquered
- Glutz needle bearing 16 mm
- 16 mm twin, semi-outside
- 16 mm twin, outside
- Glutz easyfix®
- Knob fixing
- Fixing centres 112 mm

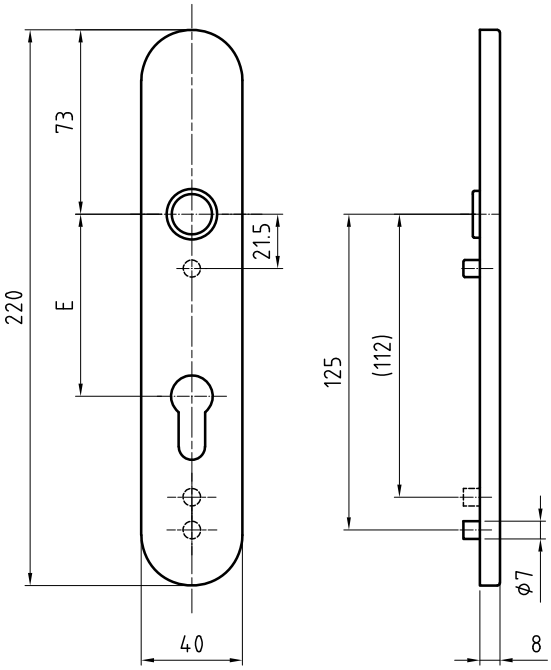

5347.4C
Steinless steel long plate for bathrooms to clip
p.84

5350C
Stainless steel short plate to clips
p.116

3.2 Long plates

Stainless steel long plate to clips
5348C

Standard version
- Length 220 mm
- Width 40 mm
- Projection 8 mm
- Satin stainless steel
- 16 mm guide for Glutz glide
- Base plate on one side with guided cam CN
- Base plate on one side with threaded cam M4 CG
- Fixing centres 125 mm

Cutout
- 5348.00C blind
- 5348.0C blank
- 5348.1C BB standard keyhole
- 5348.2C RZ round cylinder
- 5348.3C PZ profile cylinder
- 5348.4C WC privacy function
- 5348.8C PRZ
- 5348.9C OVZ oval cylinder
- Cutouts for lever handles
- .19 for lever handles ø 18 mm
- .21 for lever handles ø 20 mm
- .23 for lever handles ø 22 mm

Options
- Polished stainless steel
- RAL lacquered
- PVD lacquered
- Glutz needle bearing 16 mm
- 16 mm twin, semi-outside
- 16 mm twin, outside
- Glutz easyfix®
- Knob fixing
- Fixing centres 112 mm

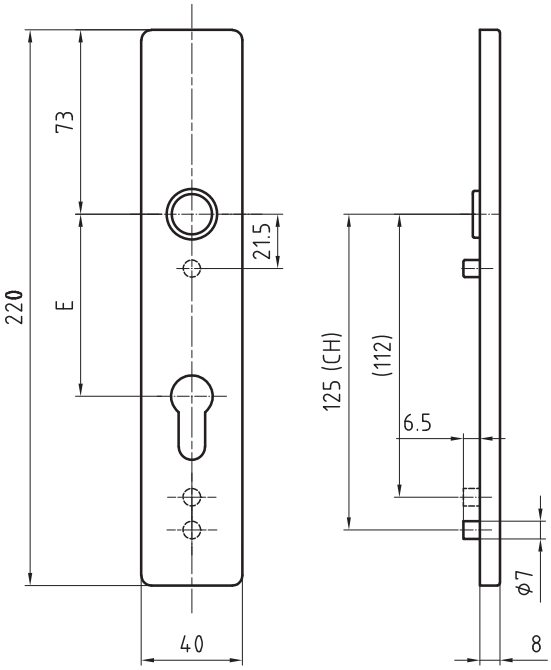

5347C
Stainless steel long plate to clips
p.110

5349C
Stainless steel short plate to clips
p.115

5350C
Stainless steel short plate to clips
p.116

3.2 Long plates

Stainless steel long plate
5369

Standard version
- Length 250 mm
- Width 55 mm
- Projection 2 mm
- Satin stainless steel
- 16 mm guide for Glutz glide

Cutout
- 5369.00 blind
- 5369.0 blank
- 5369.1 BB standard keyhole
- 5369.2 RZ round cylinder
- 5369.3 PZ profile cylinder
- 5369.4 WC privacy function
- 5369.8 PRZ
- 5369.9 OVZ oval cylinder

Options
- Polished stainless steel
- RAL lacquered
- PVD lacquered
- Glutz needle bearing 16 mm
- 16 mm outside
- 16 mm outside, conical
- 16 mm twin, inside
- 16 mm twin, semi-outside
- 16 mm twin, outside
- 16 mm twin, outside, conical
- Glutz easyfix®
- Tribloc suitable
- Knob fixing

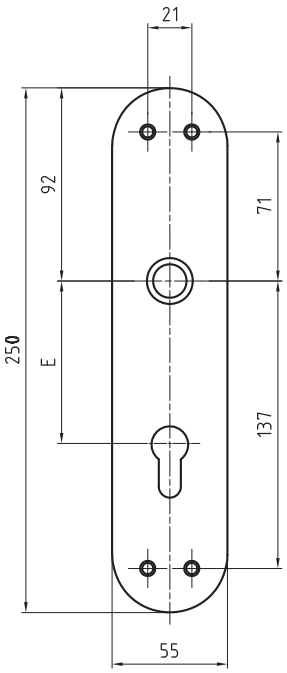

5369S
Stainless steel long plate
p.113

3.2 Long plates

Stainless steel long plate
5369S

Standard version
- Length 250 mm
- Width 55 mm
- Projection 2 mm
- Satin stainless steel
- 16 mm guide for Glutz glide
- Outside plate with four M4 threaded cams
- Inside plate with 4 fixing holes
- For 2 mm cylinder projection

Cutout
- 5369.00S blind
- 5369.0S blank
- 5369.2S RZ round cylinder
- 5369.3S PZ profile cylinder

Options
- Polished stainless steel
- RAL lacquered
- PVD lacquered
- Glutz needle bearing 16 mm
- 16 mm outside
- 16 mm outside, conical
- 16 mm twin, inside
- 16 mm twin, semi-outside
- 16 mm twin, outside
- 16 mm twin, outside, conical
- Glutz easyfix®
- Tribloc suitable
- Cylinder protection roses for cylinder projection
  RZ: 6, 8, 9, 10, 12, 15, 16, 18, 20, 22 mm
  PZ: 6, 8, 10, 12, 14, 16, 18, 20, 22 mm
- Knob fixing

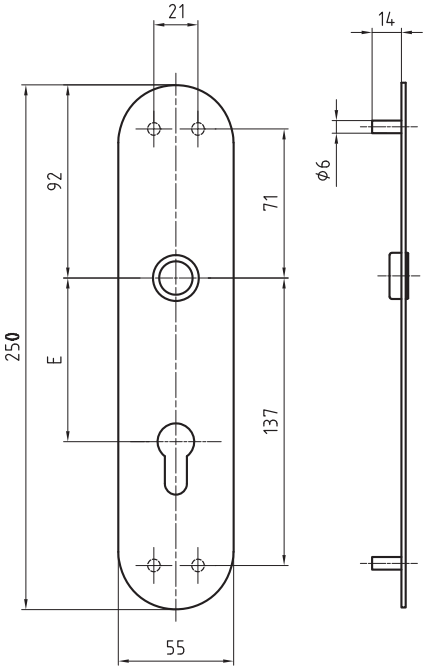

5369
Stainless steel long plate
p.112

3.2 Long plates

Stainless steel long plate
5444

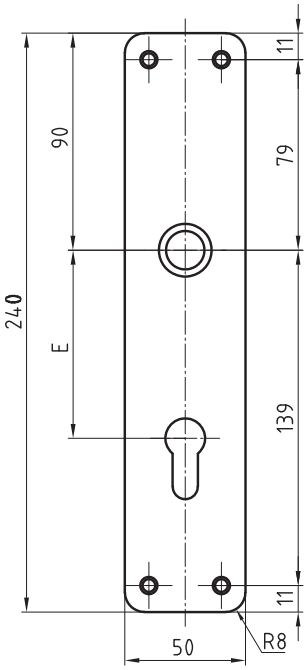

Standard version
- Length 240 mm
- Width 50 mm
- Projection 2 mm
- Satin stainless steel
- 16 mm guide for Glutz glide

Cutout
- 5444.00 blind
- 5444.0 blank
- 5444.1 BB standard keyhole
- 5444.2 RZ round cylinder
- 5444.3 PZ profile cylinder
- 5444.4 WC privacy function
- 5444.8 PRZ
- 5444.9 OVZ oval cylinder

Options
- Polished stainless steel
- RAL lacquered
- PVD lacquered
- Glutz needle bearing 16 mm
- 16 mm outside
- 16 mm outside, conical
- 16 mm twin, inside
- 16 mm twin, semi-outside
- 16 mm twin, outside
- Glutz easyfix®
- Knob fixing

Stainless steel short plate to clips
5349C

Standard version
- Length 177 mm
- Width 40 mm
- Projection 8 mm
- Satin stainless steel
- 16 mm guide for Glutz glide
- Base plate on one side with guided cam CN
- Base plate on one side with threaded cam M4 CG
- Fixing centres 125 mm

Cutout
- 5349.00C blind
- 5349.0C blank
- 5349.1C BB standard keyhole
- 5349.2C RZ round cylinder
- 5349.3C PZ profile cylinder
- 5349.4C WC privacy function
- 5349.8C PRZ
- 5349.9C OVZ oval cylinder
- Cutouts for lever handles
- .19 for lever handles ø 18 mm
- .21 for lever handles ø 20 mm
- .23 for lever handles ø 22 mm

Options
- Polished stainless steel
- RAL lacquered
- PVD lacquered
- Glutz needle bearing 16 mm
- 16 mm twin, semi-outside
- 16 mm twin, outside
- Glutz easyfix®
- Knob fixing
- Fixing centres 112 mm

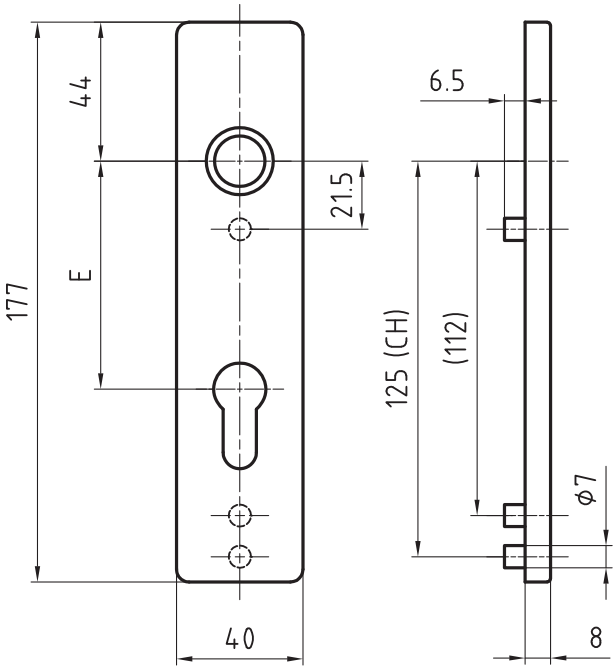

5349.4 C
Stainless steel short plates to clip
p.84

5348C
Stainless steel long plate to clips
p.111

3.3 Short plates

Stainless steel short plate to clips
5350C

Standard version
- Length 177 mm
- Width 40 mm
- Projection 8 mm
- Satin stainless steel
- 16 mm guide for Glutz glide
- Base plate on one side with guided cam CN
- Base plate on one side with threaded cam M4 CG
- Fixing centres 125 mm

Cutout
- 5350.00C blind
- 5350.0C blank
- 5350.1C BB standad keyhole
- 5350.2C RZ round cylinder
- 5350.3C PZ profile cylinder
- 5350.4C WC privacy function
- 5350.8C PRZ
- 5350.9C OVZ oval cylinder
- Cutouts for lever handles
- .19 for lever handles ø 18 mm
- .21 for lever handles ø 20 mm
- .23 for lever handles ø 22 mm

Options
- Polished stainless steel
- RAL lacquered
- PVD lacquered
- Glutz needle bearing 16 mm
- 16 mm twin, semi-outside
- 16 mm twin, outside
- Glutz easyfix®
- Knob fixing
- Fixing centres 112 mm

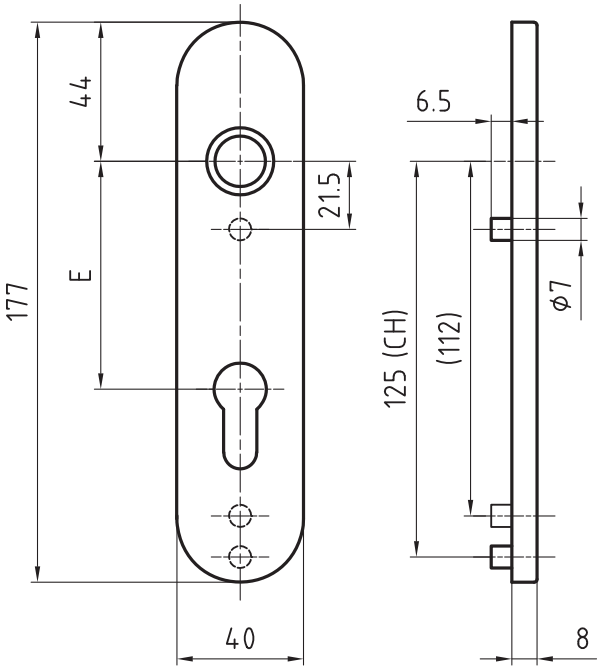

5350.4 C
Stainless steel short plates to clip
p.84

5347C
Stainless steel long plate to clips
p.110

3.3 Short plates

Stainless steel short plate to clips
5390C Sapphire

Standard version
- Length 133 mm
- Width 36 mm
- Projection 8 mm
- Satin stainless steel
- To door handle 5080

Cutout
- 5390.0C blank
- 5390.1C BB standard keyhole
- 5390.2C RZ round cylinder
- 5390.3C PZ profile cylinder
- 5390.4C WC privacy function
- 5390.8C PRZ
- 5390.9C OVZ oval cylinder

Options
- Polished stainless steel
- RAL lacquered
- PVD lacquered

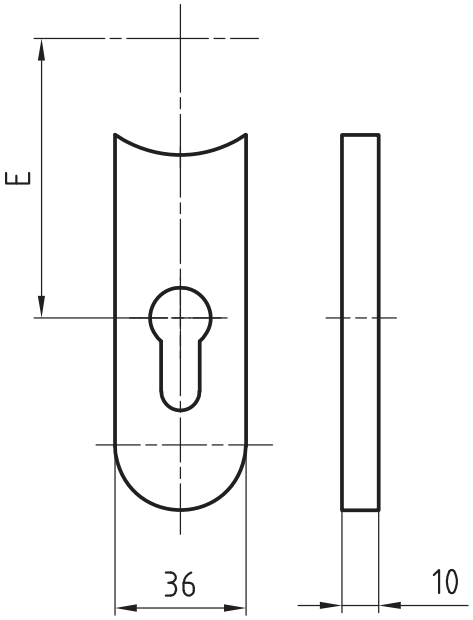

5080
Stainless steel lever handle
p.49

5085/5616 CF
Stainless steel window handle
p.218

8500
Stainless steel window drive
p.241

5835
Stainless steel door knob
p.76

3.3 Short plates

Stainless steel short plate
6120

Standard version
- Length 157 mm
- Width 44 mm
- Projection 3 mm
- Satin stainless steel
- 16 mm guide for Glutz glide
- Fixing holes M4
- Fixing centres 90,5 mm

Cutout
- 6120.00 blind
- 6120.0 blank
- 6120.1 BB standard keyhole
- 6120.2 RZ round cylinder
- 6120.3 PZ profile cylinder
- 6120.4 WC privacy function
- 6120.8 PRZ
- 6120.9 OVZ oval cylinder

Options
- Polished stainless steel
- RAL lacquered
- PVD lacquered
- Glutz needle bearing 16 mm
- 16 mm outside
- Glutz easyfix®
- Knob fixing
- Threaded cam M4

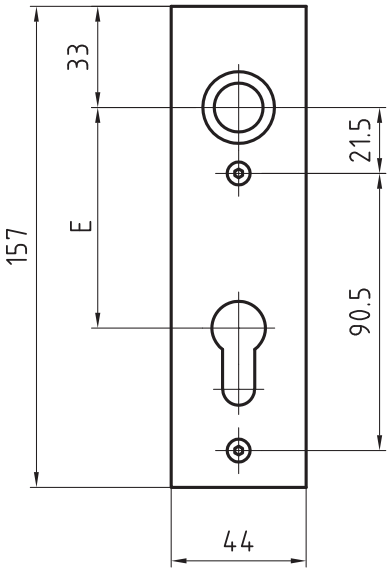

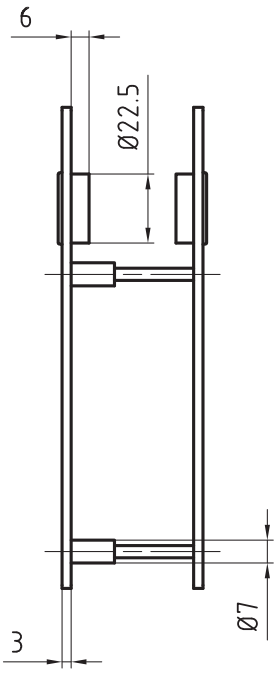

6141
Stainless steel cylinder escutcheon
p.100

6141.4
Stainless steel escutch-eons
p.84

3.3 Short plates

Stainless steel flushpull handle
5374

Standard version
- Length 120 mm
- Width 40 mm
- Projection 1 mm
- Satin stainless steel
- 10.7 mm recessed

Cutout
- 5374.0 blank
- 5374.1 BB standard keyhole
- 5374.2 RZ round cylinder
- 5374.3 PZ profile cylinder

Options
- Polished stainless steel
- RAL lacquered
- PVD lacquered

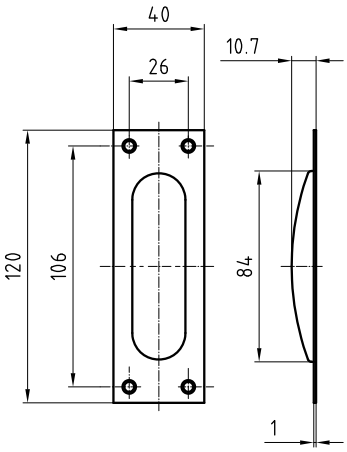

Stainless steel backplate
5370

Standard version
- Length 200 mm
- Width 200 mm
- Projection 2 mm
- Satin stainless steel
- 16 mm guide for Glutz glide

Cutout
- 5370.00C blind
- 5370.0C blank
- 5370.1C BB
- 5370.2C RZ
- 5370.3C PZ
- 5370.4C WC
- 5370.8C PRZ
- 5370.9C OVZ

Options
- Polished stainless steel
- RAL lacquered
- PVD lacquered
- Glutz needle bearing 16 mm
- 16 mm outside
- 16 mm outside, conical
- 16 mm twin, inside
- 16 mm twin, semi-outside
- 16 mm twin, outside
- 16 mm twin, outside, conical
- Glutz easyfix®
- Knob fixing

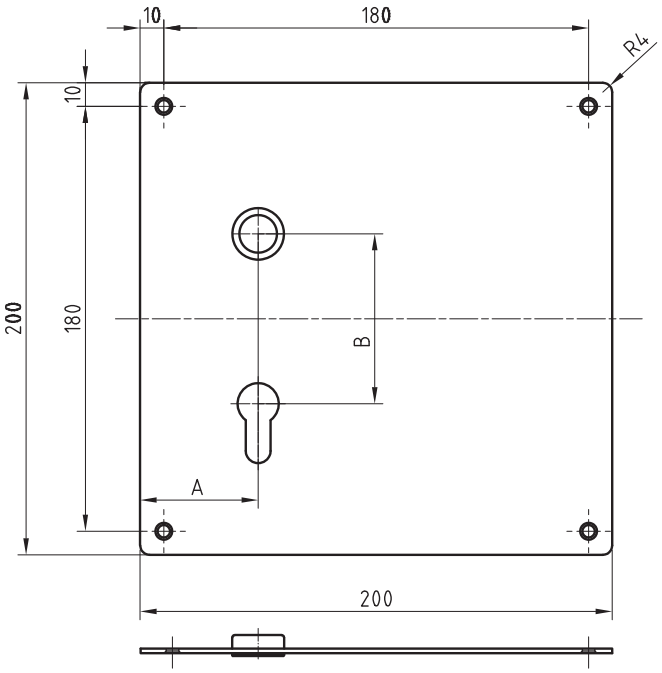

5371
Stainless steel backplate
p.121

5372C
Stainless steel backplate to clips
p.122

Stainless steel backplate
5371

Standard version
- Length 250 mm
- Width 250 mm
- Projection 2 mm
- Satin stainless steel
- 16 mm guide for Glutz glide

Cutout
- 5371.00 blind
- 5371.0 blank
- 5371.1 BB standard keyhole
- 5371.2 RZ round cylinder
- 5371.3 PZ profile cylinder
- 5371.4 WC privacy function
- 5371.8 PRZ
- 5371.9 OVZ oval cylinder

Options
- Polished stainless steel
- RAL lacquered
- PVD lacquered
- Glutz needle bearing 16 mm
- 16 mm outside
- 16 mm outside, conical
- 16 mm twin, inside
- 16 mm twin, semi-outside
- 16 mm twin, outside
- 16 mm twin, outside, conical
- Glutz easyfix®
- Knob fixing
- Threaded cam M4

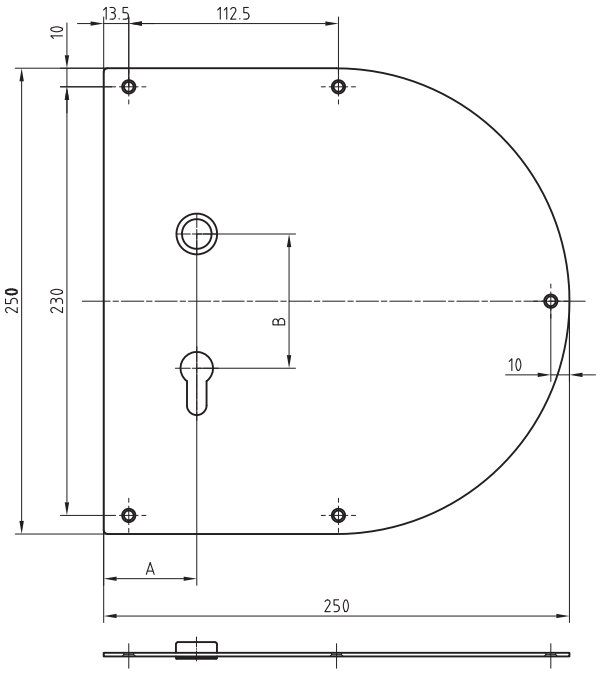

5370
Stainless steel backplate
p.120

5372C
Stainless steel backplate to clips
p.122

3.4 Backplates and kickplates

Stainless steel backplate to clips
5372C

Standard version
- Length 185 mm
- Width 185 mm
- Projection 8 mm
- Satin stainless steel
- 16 mm guide for Glutz glide
- Backset 35 mm
- Base plate on one side with guided cam CN
- Base plate on one side with threaded cam M4 CG

Cutout
- 5372.00C blind
- 5372.0C blank
- 5372.1C BB
- 5372.2C RZ
- 5372.3C PZ
- 5372.4C WC
- 5372.8C PRZ
- 5372.9C OVZ

Options
- Polished stainless steel
- RAL lacquered
- PVD lacquered
- Glutz needle bearing 16 mm
- 16 mm outside
- 16 mm outside, conical
- 16 mm twin, inside
- 16 mm twin, semi-outside
- 16 mm twin, outside
- 16 mm twin, outside, conical
- Glutz easyfix®
- Knob fixing

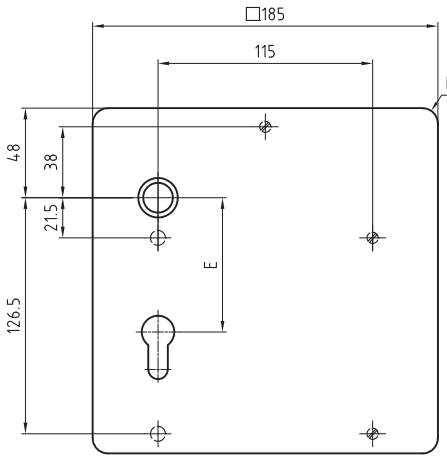

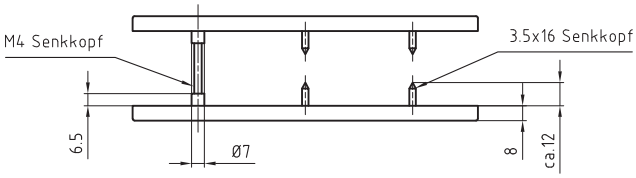

5370
Stainless steel backplate
p.120

5371
Stainless steel backplate
p.121

Standard version
- Length in acc. with customer specifications
- Width in acc. with customer specifications
- Material thickness 1.5 mm
- Satin stainless steel

Stainless steel kickplate
5375

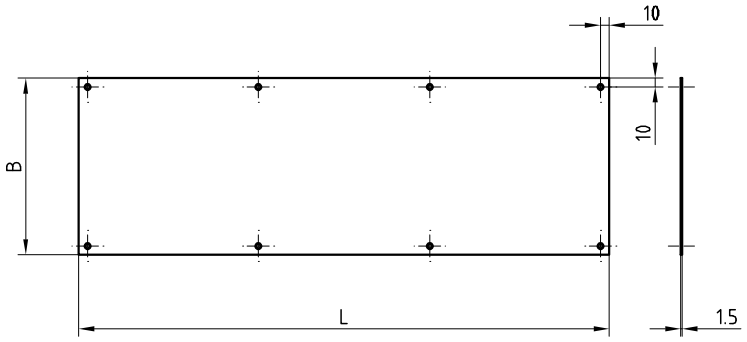

3.4 Backplates and kickplates

Stainless steel flush handle for sliding or gymnasium doors
6500

Standard version
- Length 240 mm
- Width 170 mm
- Projection 20 mm
- Satin stainless steel
- Square spindle 9 mm
- Fixing holes M4
- Indications left/right required

Cutout
- 6500.0 blank
- 6500.2 RZ round cylinder
- 6500.3 PZ profile cylinder

Options
- RAL lacquered
- PVD lacquered

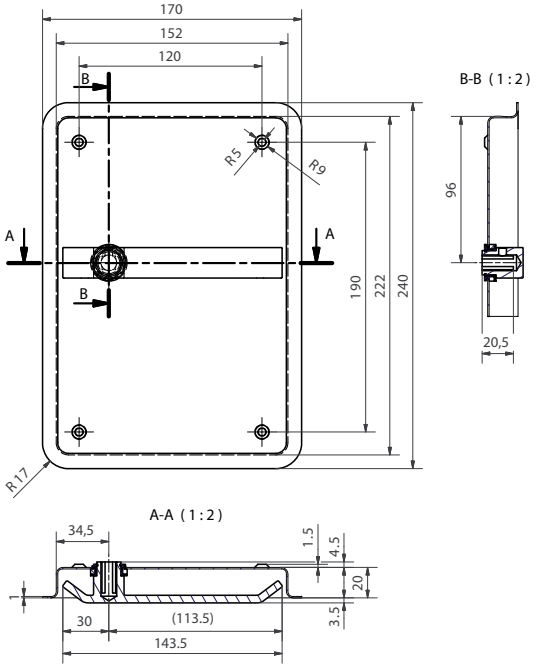

3.5 Door stops

Standard version
- Door stop ø 40/53 mm
- Base plate in stainless steel, 53 x 2 mm
- Rubber buffer black 40 x 28 mm
- Wall fixing
- Concealed fixing
- Threaded screw 7 x 40 mm

Stainless steel door stop
5945.0

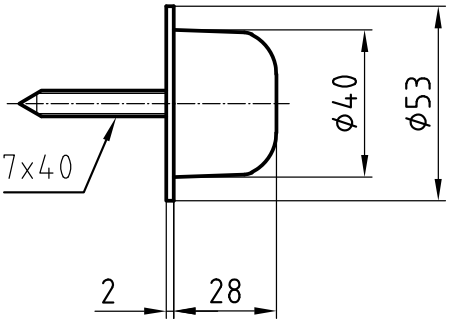

5945A
Stainless steel door stop
p.126

5950
Stainless steel door stop
p.128

5946
Stainless steel door stop
p.127

3.5 Door stops

Standard version
- Door stop ø 40/53 mm
- Base plate in stainless steel, 53 x 2 mm
- Rubber buffer black 40 x 28 mm
- Wall fixing
- Tube nickel plated, L = 20 mm
- Concealed fixing
- Threaded screw 7 x 40 mm

Options
- Tube nickel plated, L = 40 mm
- Tube nickel plated, L = 60 mm

Stainless steel door stop
5945A

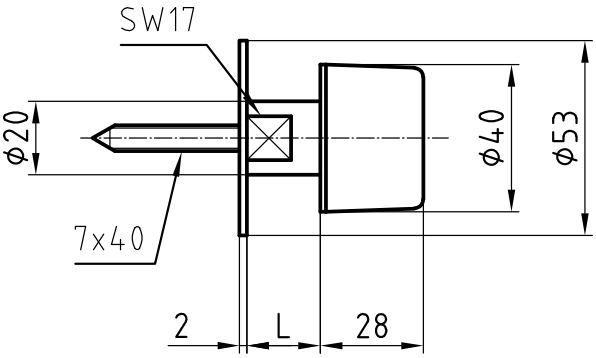

5945.0
Stainless steel door stop
p.125

5946
Stainless steel door stop
p.127

5950
Stainless steel door stop
p.128

Stainless steel door stop
5946

Standard version
- ø 62 mm
- Satin stainless steel
- Rubber buffer black
- For floor fixing

Options
- Polished stainless steel

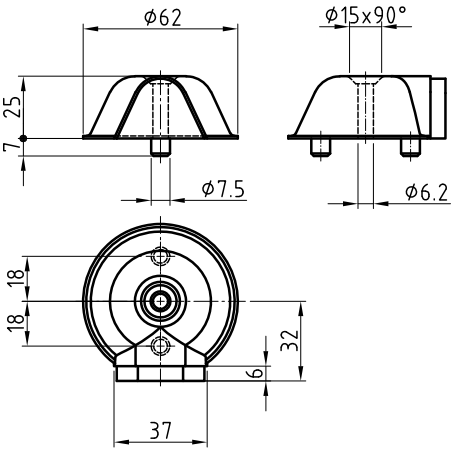

5945.0
Stainless steel door stop
p.125

5945A
Stainless steel door stop
p.126

5950
Stainless steel door stop
p.128

Standard version
- Door stop ø 45 mm
- Polished stainless steel
- Rubber buffer in white, grey or black
- Wall fixing
- Concealed fixing

Stainless steel door stop
5950

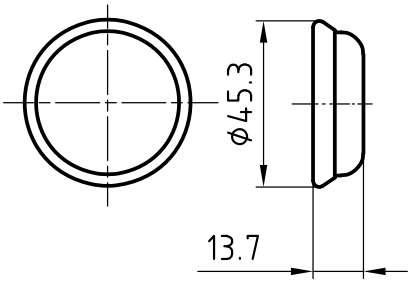

5945A
Stainless steel door stop
p.126

5945.0
Stainless steel door stop
p.125

5946
Stainless steel door stop
p.127

3.6 Roses and escutcheons

Various

TWS 70045.10
Indicator
Escutcheon to clip ø 53 x 8 mm
Fixing centres 38 mm
incl. screws and square spindle

TWS 70046.10
Turn
Escutcheon to clip ø 53 x 8 mm
Fixing centres 38 mm

TWS 70047.10
Turn
Escutcheon to clip ø 53 x 8 mm
Fixing centres 38 mm

TWS 70048.10
Pair knob
Escutcheon to clip ø 53 x 8 mm
Fixing centres 38 mm
incl. screws

9001
Fanlight openers
To fix abat-jour
Execution to drill in
Length 100 mm
Blue galvanised
Pack of 20 pieces

9002
Fanlight openers
To fix abat-jour
Execution for screw fixing
Lengths 120, 140, 160, 180, 200, 250 mm
Blue galvanised
Pack of 20 pieces

Product overview

4. Secaport security plates

4.1 Glutz Secaport

5630S
p. 131

5330S
p. 132

5330.2S-RS
p. 133

5330.2S-ZA
p. 134

5330.3S-ZA
p. 135

5430
p. 136

5420
p. 137

6150
p. 138

6155
p. 139

5439.2-ZA
p. 140

5439.3-ZA
p. 141

5465
p. 142

5466
p. 143

4.1 Glutz Secaport

Stainless steel rose 12 mm
5630S

Standard version
- Outside rose 5630S
- Solid satin stainless steel
- ø 53 mm
- Projection 12 mm
- With threaded cam M5
- 16 mm guide for Glutz glide
- Inside rose to clip 5630C
- ø 53 mm
- Projection 8 mm
- With guided cam M5
- Fixing centres 38 mm
- Satin stainless steel

Options
- Polished stainless steel
- RAL lacquered
- PVD lacquered
- Glutz needle bearing 16 mm
- 16 mm twin, semi-outside
- Glutz easyfix®
- Knob fixing

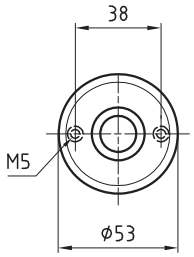

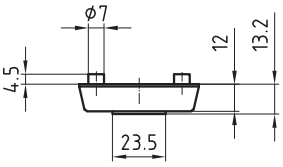

5330S
Stainless steel cylinder protection rose ES 1
p.132

5330.2S-RS
Stainless steel cylinder protection rose ES 1
p.133

5330.2S-ZA
Stainless steel cylinder protection rose ES 1
p.134

5330.3S-ZA
Stainless steel cylinder protection rose ES 1
p.135

Stainless steel cylinder protection rose ES 1
5330S

ES 1

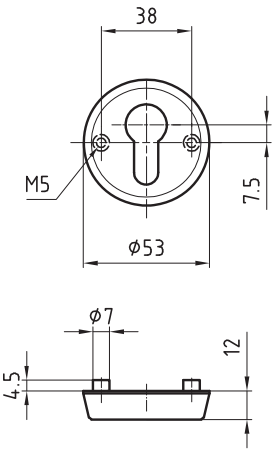

Product profile
Tested to DIN 18257-ES1-R (2003-03)
EN 1906 resistance class 2 (2002-05)
For burglar resistant doors according to
ENV 1627 - 1630 WK 1+2 (1999-01)

Standard version
- Outside rose 5330S
- Solid satin stainless steel
- ø 53 mm
- Projection 12 mm
- With threaded cam M5
- Inside rose to clip 5330C
- ø 53 mm
- Projection 8 mm
- With guided cam M5
- Fixing centres 38 mm
- Satin stainless steel

Cutout
- 5330.2 RZ round cylinder
- 5330.3 PZ profil cylinder

Options
- Polished stainless steel
- RAL lacquered
- PVD lacquered

5630S
Stainless steel rose 12 mm
p.131

5330.2S-RS
Stainless steel cylinder protection rose ES 1
p.133

5330.2S-ZA
Stainless steel cylinder protection rose ES 1
p.134

5330.3S-ZA
Stainless steel cylinder protection rose ES 1
p.135

Stainless steel cylinder protection rose ES 1
5330.2S-RS

ES 1

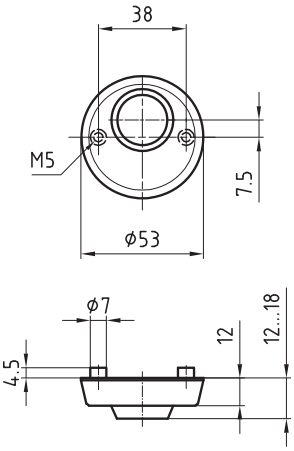

Product profile
Tested to DIN 18257-ES1-R (2003-03)
EN 1906 resistance class 2 (2002-05)
For burglar resistant doors according to
ENV 1627 - 1630 WK 1+2 (1999-01)

Standard version
- Outside rose 5330.2S-RS
- Solid satin stainless steel
- ø 53 mm
- Projection 12 mm
- With threaded cam M5
- Prepared for round cylinder protection roses
- Inside rose to clip 5330.2C
- ø 53 mm
- Projection 8 mm
- With guided cam M5
- Fixing centres 38 mm
- Satin stainless steel

Options
- Polished stainless steel
- RAL lacquered
- PVD lacquered
- Round cylinder protection roses stainless steel
- 5330/1: cylinder projection 7-12 mm
- 5330/2: cylinder projection 12-15 mm
- 5330/3: cylinder projection 15-18 mm
- 5330/4: cylinder projection 18-21 mm

5630S
Stainless steel rose 12 mm
p.131

5330S
Stainless steel cylinder protection rose ES 1
p.132

5330.2S-ZA
Stainless steel cylinder protection rose ES 1
p.134

5330.3S-ZA
Stainless steel cylinder protection rose ES 1
p.135

4.1 Glutz Secaport

Stainless steel cylinder protection rose ES 1
5330.2S-ZA

ES 1

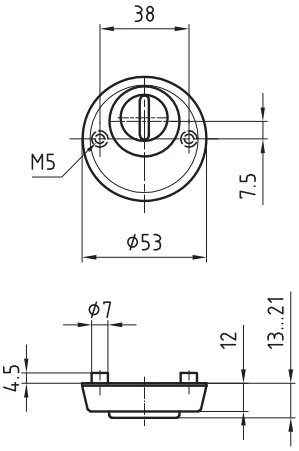

Product profile
Tested to DIN 18257-ES1-R-ZA (2003-03)
EN 1906 resistance class 2 (2002-05)
For burglar resistant doors according to
ENV 1627 - 1630 WK 1+2 (1999-01)

Standard version
- Outside rose 5330.2S-ZA
- Solid satin stainless steel
- ø 53 mm
- Projection 12 mm
- With threaded cam M5
- Cylinder cover 9-16 mm
- Inside rose to clip 5330.2C
- ø 53 mm
- Projection 8 mm
- With guided cam M5
- Fixing centres 38 mm
- Satin stainless steel

Options
- Polished stainless steel
- RAL lacquered
- PVD lacquered

5630S
Stainless steel rose 12 mm
p.131

5330S
Stainless steel cylinder protection rose ES 1
p.132

5330.2S-RS
Stainless steel cylinder protection rose ES 1
p.133

5330.3S-ZA
Stainless steel cylinder protection rose ES 1
p.135

Stainless steel cylinder protection rose ES 1
5330.3S-ZA

ES 1

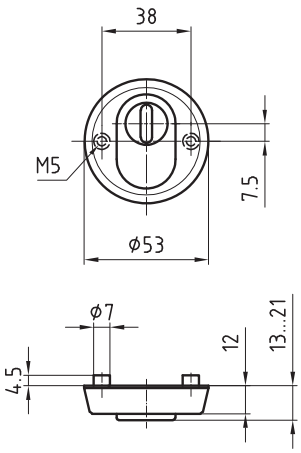

Product profile
Tested to DIN 18257-ES1-R-ZA (2003-03)
EN 1906 resistance class 2 (2002-05)
For burglar resistant doors according to
ENV 1627 - 1630 WK 1+2 (1999-01)

Standard version
- Outside rose 5330.3S-ZA
- Solid satin stainless steel
- ø 53 mm
- Projection 12 mm
- With threaded cam M5
- Cylinder cover 9-16 mm
- Inside rose to clip 5330.3C
- ø 53 mm
- Projection 8 mm
- With guided cam M5
- Fixing centres 38 mm
- Satin stainless steel

Options
- Polished stainless steel
- RAL lacquered
- PVD lacquered

5630S
Stainless steel rose 12 mm
p.131

5330S
Stainless steel cylinder protection rose ES 1
p.132

5330.2S-RS
Stainless steel cylinder protection rose ES 1
p.133

5330.2S-ZA
Stainless steel cylinder protection rose ES 1
p.134

4.1 Glutz Secaport

Stainless steel security plate ES 1
5430

ES 1

Product profile
Tested to DIN 18257-ES1-L (2003-03)
EN 1906 resistance class 2 (2002-05)
For burglar resistant doors according to ENV 1627 - 1630 WK 1+2 (1999-01)

Standard version
- Satin stainless steel
- Guide 16 mm for Glutz glide
- Perforated for round cylinder 22 mm
- 5433.2S for door handle operation
- 5434.2S for knob fixing
- Outer plate 250x55x12 mm, prepared for RZ protection rose
- 5430.2S-RS for door handle operation
- 5432.2S-RS for knob fixing
- Outside plate

- Inside plate 5435.2C straight 8 mm
- Inside plate 5436.2C conic 12 mm for SEAvision
- Inside plate 5437.2C conic 18 mm for SEAvision
  Powerpack or KABA-Elostar
- Inner combi plate 5426.2C 12 mm for SEAvision
- Inner combi plate 5427.2C 18 mm for SEAvision Powerpack or KABA Elostar
- Round cylinder protection roses stainless steel
- 5431/1: cylinder projection 6-10mm
- 5431/2: cylinder projection 10-14 mm
- 5431/3: cylinder projection 14-18 mm
- 5431/4: cylinder projection 18-22 mm
- 5431/5: cylinder projection 22-26 mm

Options
- Polished stainless steel
- RAL lacquered
- PVD lacquered
- Glutz needle bearing 16 mm
- 16 mm twin, semi-outside
- Glutz easyfix®

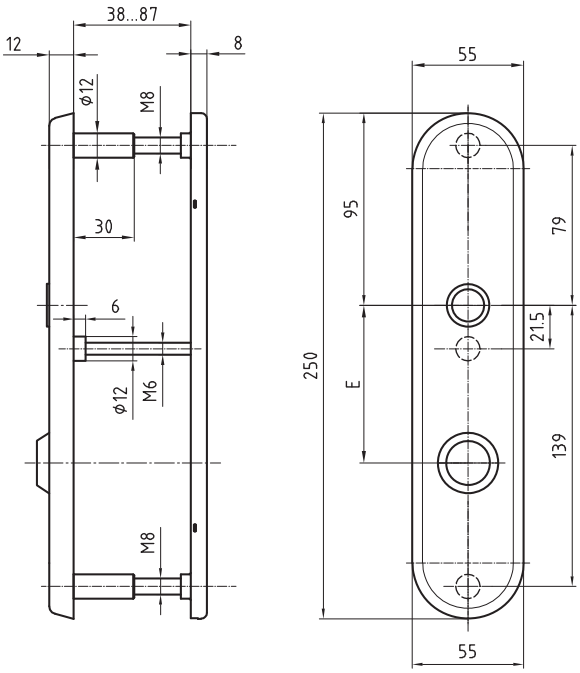

5420
Stainless steel security plate ES 1
p.137

5465
Stainless steel long security plate ES 2
p.142

5439.2-ZA
Stainless steel long security plate ES 3
p.140

5439.3-ZA
Stainless steel long security plate ES 3
p.141

5466
Stainless steel long security plate ES 3
p.143

4.1 Glutz Secaport

Stainless steel security plate ES 1
5420

ES 1

Product profile
Tested to DIN 18257-ES1-L-ZA (2003-03)
EN 1906 resistance class 2 (2002-05)
For burglar resistant doors according to
ENV 1627 - 1630 WK 1+2 (1999-01)

Standard version
- Satin stainless steel
- Guide 16 mm for Glutz glide
- Outer plate 250x55x12 mm, PZ
- 5423.3S for door handle operation
- 5424.3S for door knob operation
- Outer plate 250x55x12 mm
- Cylinder cover 9-16 mm
- 5420.3S-ZA for door handle operation
- 5422.3S-ZA for knob fixing
- Inside plate 5435.3C straight 8 mm

Options
- Polished stainless steel
- RAL lacquered
- PVD lacquered
- Glutz needle bearing 16 mm
- 16 mm twin, semi-outside
- Glutz easyfix®

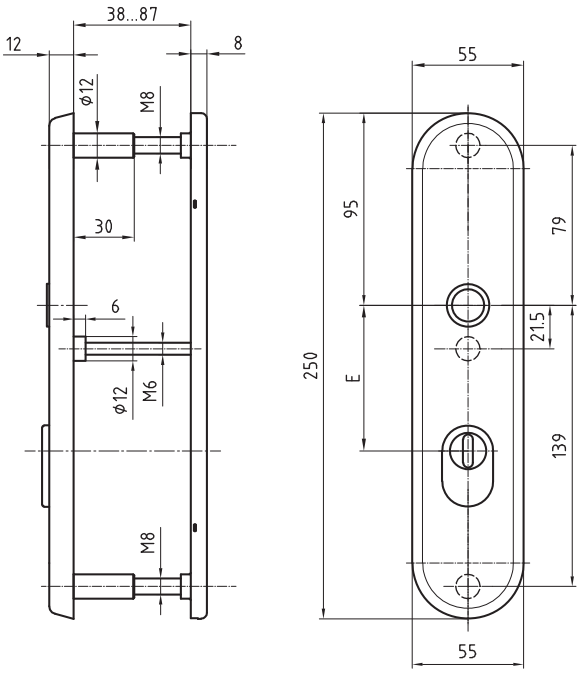

5430
Stainless steel security plate ES 1
p.136

5465
Stainless steel long security plate ES 2
p.142

5439.2-ZA
Stainless steel long security plate ES 3
p.140

5439.3-ZA
Stainless steel long security plate ES 3
p.141

5466
Stainless steel long security plate ES 3
p.143

4.1 Glutz Secaport

Stainless steel security plate ES 1
6150

ES 1

Product profile
Tested to DIN 18257-ES1-L (2003-03)
EN 1906 resistance class 2 (2002-05)
For burglar resistant doors according to ENV 1627 - 1630 WK 1+2 (1999-01)

Standard version
- Satin stainless steel
- Guide 16 mm for Glutz glide
- Perforated for round cylinder 22 mm
- 6153.2S for door handle operation
- 6154.2S for knob fixing
- Outer plate 250x55x12 mm, prepared for RZ protection rose
- 6150.2S-RS for door handle operation
- 6152.2S-RS for knob fixing
- Outside plate

- Inside plate 6146.2C straight 8 mm

- Round cylinder protection roses stainless steel
- 5431/1: cylinder projection 6-10mm
- 5431/2: cylinder projection 10-14 mm
- 5431/3: cylinder projection 14-18 mm
- 5431/4: cylinder projection 18-22 mm
- 5431/5: cylinder projection 22-26 mm

Options
- Polished stainless steel
- RAL lacquered
- PVD lacquered
- Glutz needle bearing 16 mm
- 16 mm twin, semi-outside
- Glutz easyfix®

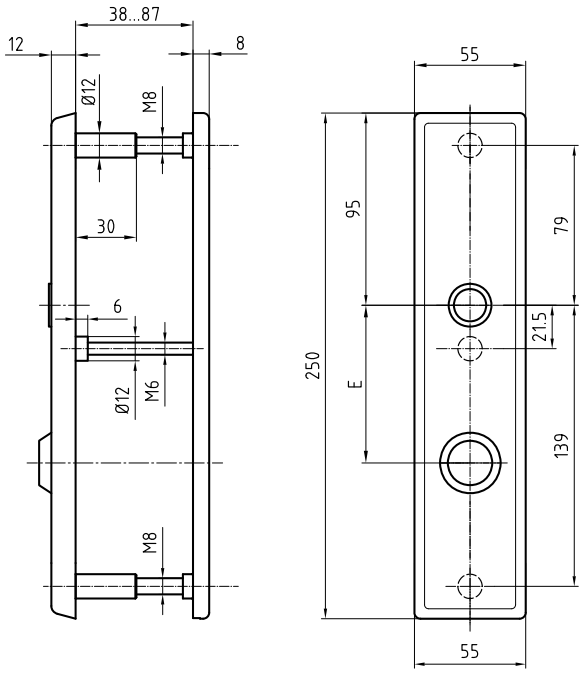

6155
Stainless steel security plate ES 1
p.139

4.1 Glutz Secaport

Stainless steel security plate ES 1
6155

ES 1

Product profile
Tested to DIN 18257-ES1-L-ZA (2003-03)
EN 1906 resistance class 2 (2002-05)
For burglar resistant doors according to
ENV 1627 - 1630 WK 1+2 (1999-01)

Standard version
- Satin stainless steel
- Guide 16 mm for Glutz glide
- Outer plate 250x55x12 mm, PZ
- 6156.3S for door handle operation
- 6157.3S for door knob operation
- Outer plate 250x55x12 mm
- Cylinder cover 9-16 mm
- 6155.3S-ZA for door handle operation
- 6158.3S-ZA for knob fixing
- Inside plate 6146.3C straight 8 mm

Options
- Polished stainless steel
- RAL lacquered
- PVD lacquered
- Glutz needle bearing 16 mm
- 16 mm twin, semi-outside
- Glutz easyfix®

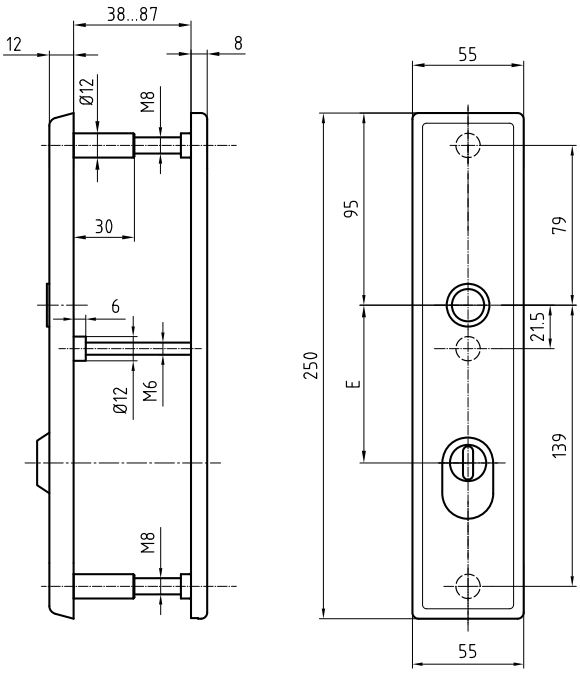

6150
Stainless steel security plate ES 1
p.138

4.1 Glutz Secaport

Stainless steel long security plate ES 3
5439.2-ZA

ES 3

Product profile
Tested to DIN 18257-ES1-L-ZA (2003-03)
EN 1906 resistance class 4 (2002-05)
For burglar resistant doors according to
ENV 1627 - 1630 WK 4 (1999-01)

Standard version
- Outer plate 250x55x12 mm
- Cylinder cover 9-16 mm
- Satin stainless steel
- 16 mm guide for Glutz glide
- 5439.2S-ZA for door handle operation
- 5439K.2S-ZA for door knob operation
- Inside plate 5435.2C straight 8 mm
- Satin stainless steel
- 16 mm guide for Glutz glide
- Base plate with guide cam

- **CENTRES**
- RZ: 74 mm, 78 mm, 94 mm

Options
- Polished stainless steel
- RAL lacquered
- PVD lacquered
- Glutz needle bearing 16 mm
- 16 mm twin, semi-outside
- Glutz easyfix®

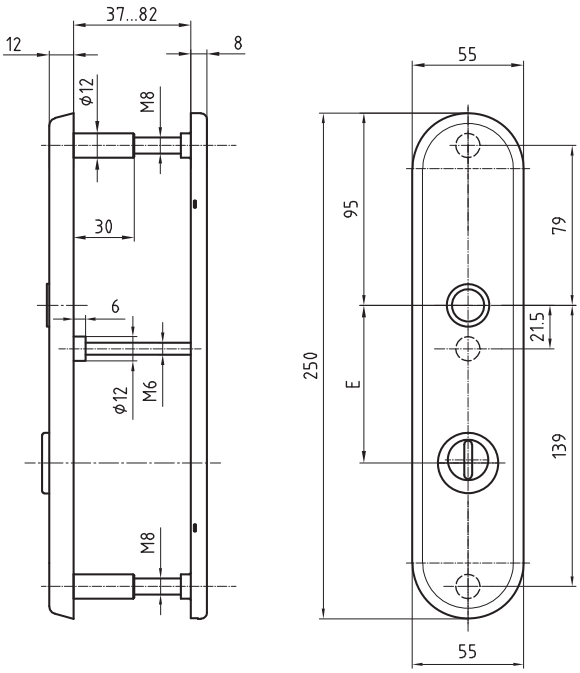

5430
Stainless steel security plate ES 1
p.136

5420
Stainless steel security plate ES 1
p.137

5465
Stainless steel long security plate ES 2
p.142

5439.3-ZA
Stainless steel long security plate ES 3
p.141

5466
Stainless steel long security plate ES 3
p.143

4.1 Glutz Secaport

Stainless steel long security plate ES 3
5439.3-ZA

ES 3

Product profile
Tested to DIN 18257-ES1-L-ZA (2003-03)
EN 1906 resistance class 4 (2002-05)
For burglar resistant doors according to
ENV 1627 - 1630 WK 4 (1999-01)

Standard version
- Outer plate 250x55x12 mm
- Cylinder cover 9-16 mm
- Satin stainless steel
- 16 mm guide for Glutz glide
- 5439.3S-ZA for door handle operation
- 5439K.3S-ZA for door knob operation
- Inside plate 5435.3C straight 8 mm
- Satin stainless steel
- 16 mm guide for Glutz glide
- Base plate with guide cam

- **CENTRES**
- PZ: 70mm, 72 mm, 78 mm, 85mm, 88mm, 92 mm

Options
- Polished stainless steel
- RAL lacquered
- PVD lacquered
- Glutz needle bearing 16 mm
- 16 mm twin, semi-outside
- Glutz easyfix®

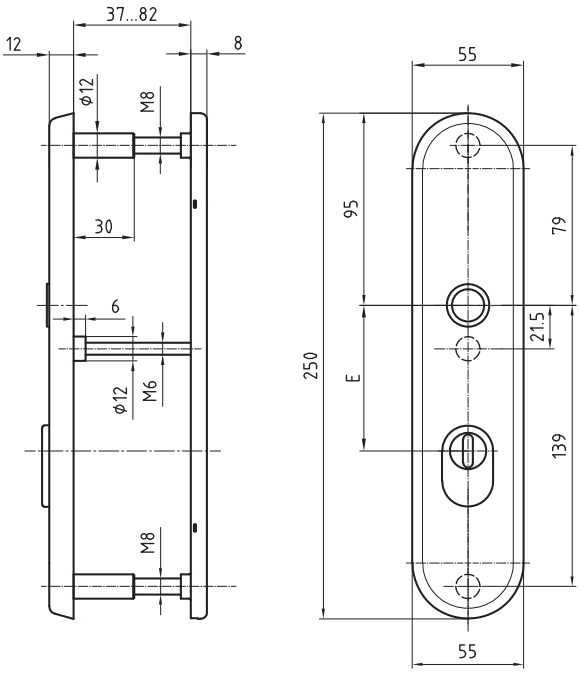

5430
Stainless steel security plate ES 1
p.136

5420
Stainless steel security plate ES 1
p.137

5465
Stainless steel long security plate ES 2
p.142

5439.2-ZA
Stainless steel long security plate ES 3
p.140

5466
Stainless steel long security plate ES 3
p.143

4.1 Glutz Secaport

Stainless steel long security plate ES 2
5465

ES 2

Product profile
Tested to DIN 18257-ES1-L-ZA (2003-03)
EN 1906 resistance class 3 (2002-05)
For burglar resistant doors according to
ENV 1627 - 1630 WK 3 (1999-01)

Standard version
- Outer plate 250x55x15 mm prepared for cylinder cover
- Satin stainless steel
- 16 mm guide for Glutz glide
- 5465 for door handle operation
- 5465K for door knob operation
- Inside plate 5435C 250x55x8 mm
- Satin stainless steel
- 16 mm guide for Glutz glide
- Base plate with guide cam

- **CENTRES**
- PZ: 70mm, 72 mm, 78 mm, 85mm, 88mm, 92 mm
- RZ: 74 mm, 78 mm, 94 mm

- Cylinder cover
- No. 1: cylinder projection 7-12 mm
- No. 2: cylinder projection 12-17 mm
- No 3: cylinder projection 17-22 mm
- No 4: cylinder projection 22-27 mm

- **IMPORTANT**
  When using in combination with KABA Elostar, it is essential to use long-type keys!

Options
- Polished stainless steel
- RAL lacquered
- PVD lacquered
- Glutz needle bearing 16 mm
- 16 mm twin, semi-outside
- Glutz easyfix®
- Inner plate 5467 solid 250x55x6 mm
- Inside plate 5436.2C conic 12 mm for SEAvision
- Inside plate 5437.2C conic 18 mm
- SEAvision Powerpack or KABA-Elostar

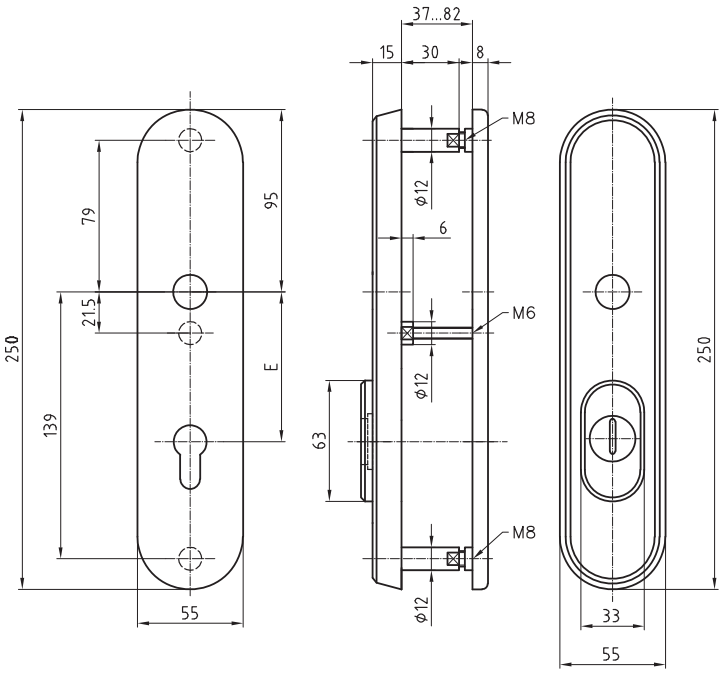

5430
Stainless steel security plate ES 1
p.136

5420
Stainless steel security plate ES 1
p.137

5439.2-ZA
Stainless steel long security plate ES 3
p.140

5439.3-ZA
Stainless steel long security plate ES 3
p.141

5466
Stainless steel long security plate ES 3
p.143

4.1 Glutz Secaport

Stainless steel long security plate ES 3
5466

ES 3

Product profile
Tested to DIN 18257-ES1-L-ZA (2003-03)
EN 1906 resistance class 4 (2002-05)
For burglar resistant doors according to
ENV 1627 - 1630 WK 4 (1999-01)

Standard version
- Outer plate 250x55x15 mm, prepared for cylinder cover
- Satin stainless steel
- 16 mm guide for Glutz glide
- 5466 for door handle operation
- 5466K for door knob operation
- Inside plate 5435C 250x55x8 mm
- Satin stainless steel
- 16 mm guide for Glutz glide
- Base plate with guide cam

- **CENTRES**
- PZ: 70mm, 72 mm, 78 mm, 85mm, 88mm, 92 mm
- RZ: 74 mm, 78 mm, 94 mm

- Cylinder cover
- No. 1: cylinder projection 7-12 mm
- No. 2: cylinder projection 12-17 mm
- No 3: cylinder projection 17-22 mm
- No 4: cylinder projection 22-27 mm

- **IMPORTANT**
  When using in combination with KABA Elostar, it is essential to use long-type keys!

Options
- Polished stainless steel
- RAL lacquered
- PVD lacquered
- Glutz needle bearing 16 mm
- 16 mm twin, semi-outside
- Glutz easyfix®
- Inner plate 5467 solid 250x55x6 mm
- Inside plate 5436.2C conic 12 mm for SEAvision
- Inside plate 5436.2C conic 18 mm
- SEAvision Powerpack or KABA-Elostar

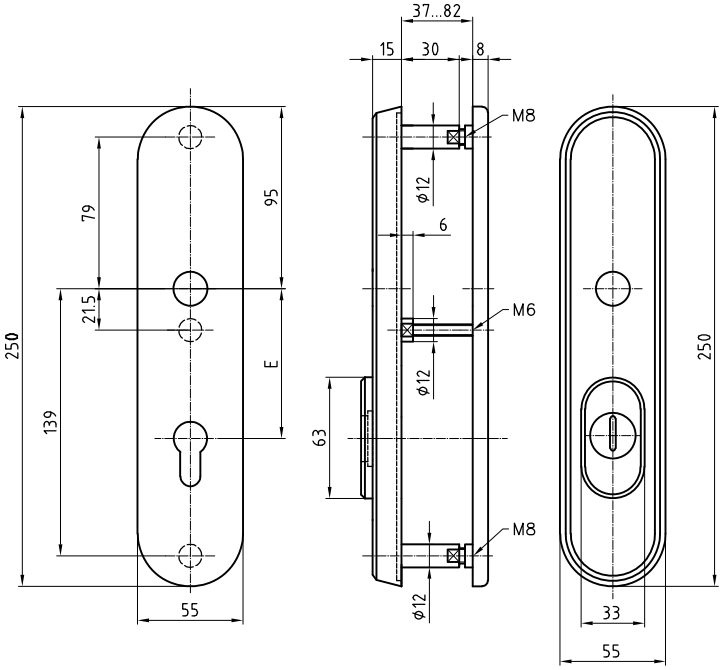

5430
Stainless steel security plate ES 1
p.136

5420
Stainless steel security plate ES 1
p.137

5465
Stainless steel long security plate ES 2
p.142

5439.2-ZA
Stainless steel long security plate ES 3
p.140

5439.3-ZA
Stainless steel long security plate ES 3
p.141

4.1 Glutz Secaport

Accessories

– site fixing template No. 203
– For plates and roses - fixing centers adjustable:

– 5330 screw set resistance class 10.9
– **5330-G40** screw set for doors 35-40 mm
– **5330-G45** screw set for doors 40-45 mm
– **5330-G50** screw set for doors 45-50 mm
– **5330-G55** screw set for doors 50-55 mm
– **5330-G60** screw set for doors 55-60 mm
– **5330-G65** screw set for doors 60-65 mm
– **5330-G70** screw set for doors 65-70 mm
– **5330-G75** screw set for doors 70-75 mm
– **5330-G80** screw set for doors 75-80 mm
– **5330-G85** screw set for doors 80-85 mm

– 5430-35 / 5472-63 screw set resistance class 10.9
– **5472-G40** screw set for doors 38-50 mm
– **5472-G40** screw set for doors 50-60 mm
– **5472-G60** screw set for doors 60-70 mm
– **5472-G70** screw set for doors 70-80 mm
– **5472-G80** screw set for doors 80-90 mm

– 5476-63 screw set resistance class 10.9
– **5476-G40** screw set for doors 37-47 mm
– **5476-G50** screw set for doors 47-57 mm
– **5476-G60** screw set for doors 57-67 mm
– **5476-G70** screw set for doors 67-77 mm
– **5476-G80** screw set for doors 77-87 mm

– 5465-35 / 5466-35 screw set
– **5430-G40** screw set for doors 38-48 mm
– **5430-G50** screw set for doors 48-58 mm
– **5430-G60** screw set for doors 58-68 mm
– **5430-G70** screw set for doors 68-78 mm
– **5430-G80** screw set for doors 78-88 mm

– 5465-67 / 5466-67 screw set
– **5465-G40** screw set for doors 37-47 mm
– **5465-G50** screw set for doors 47-57 mm
– **5465-G60** screw set for doors 57-67 mm
– **5465-G65** screw set for doors 67-77 mm
– **5465-G80** screw set for doors 77-87 mm

Product overview

5. Metal frame hardware - Lever handles and knobs

5.1 Metal frame - Lever handles

5059 Oslo
p. 146

50661 Savannah
p. 147

5072 Memphis
p. 148

5089 Assoluto
p. 149

50921 München
p. 150

5175 Saarbrücken
p. 151

5176 Hamburg
p. 152

6032 Greyville
p. 153

5.2 Metal frame - Knobs

5825E
p. 154

5830
p. 155

5838
p. 156

5839
p. 157

5840
p. 158

5841
p. 159

5.1 Metal frame - Lever handles

Stainless steel metal frame lever handle
5059 Oslo

EN 179

EN 1906
KL 3/4

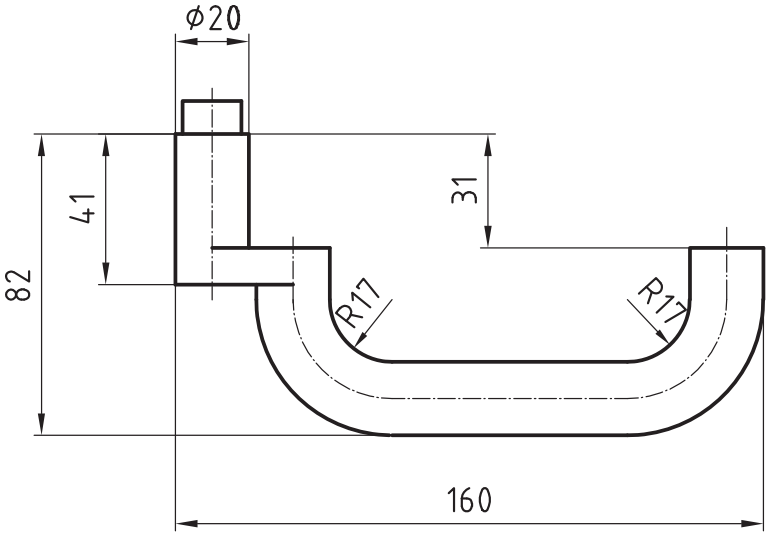

Standard version
- Lever handle length 160 mm, ø 20 mm
- Projection 82 mm
- Square spindle 8 mm
- Satin stainless steel
- 16 mm guide for Glutz glide / needle bearing (NL) / easyfix®
- Picture shows handle with 5618C rose

Options
- Polished stainless steel
- RAL lacquered
- PVD lacquered
- Square spindle 8,5 mm or 9 mm
- 16 mm guide for Glutz twin glide
- Category of use class 4, EN 1906: 2002-05

Quality standard
- Category of use class 3, EN 1906: 2002-05
- Tested for use in fire-rated and smoke protection doors to DIN 18273: 1997-12
- Admitted, combined with the appropriate lock as lever handle for emergency exits as per EN 179: 2002-06

5064
Stainless steel lever handle
p.40

5065
Stainless steel lever handle
p.41

5154
Stainless steel lever handle
p.62

5064A/5616 CF
Stainless steel window handle
p.211

8500
Stainless steel window drive
p.241

5.1 Metal frame - Lever handles

Stainless steel metal frame lever handle

50661 Savannah

EN 179

EN 1906 KL 3/4

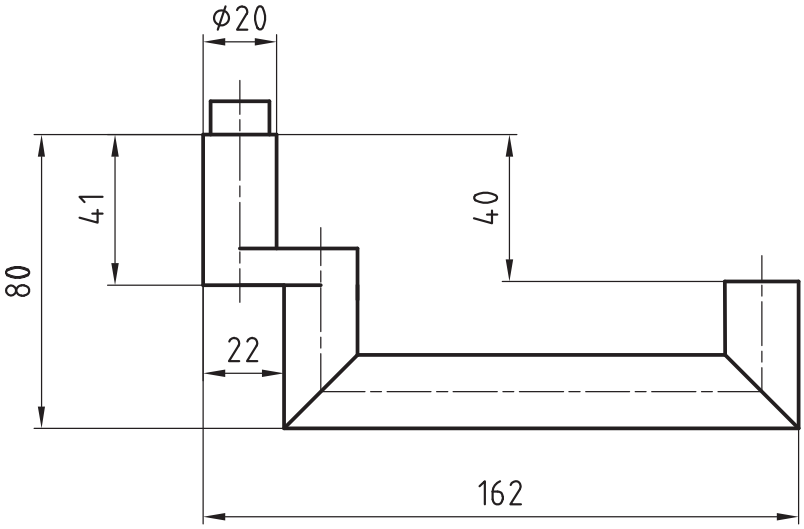

Standard version
- Lever handle length 162 mm, ø 20 mm
- Projection 80 mm
- Square spindle 8 mm
- Satin stainless steel
- 16 mm guide for Glutz glide / needle bearing (NL) / easyfix®
- Picture shows handle with 5618C rose

Options
- Polished stainless steel
- RAL lacquered
- PVD lacquered
- Square spindle 8,5 mm or 9 mm
- 16 mm guide for Glutz twin glide
- Category of use class 4, EN 1906: 2002-05

Quality standard
- Category of use class 3, EN 1906: 2002-05
- Tested for use in fire-rated and smoke protection doors to DIN 18273: 1997-12
- Admitted, combined with the appropriate lock as lever handle for emergency exits as per EN 179: 2002-06

5066
Stainless steel lever handle
p.42

5071
Stainless steel lever handle
p.46

5072
Stainless steel metal frame lever handle
p.148

5071/5616 CF
Stainless steel window handle
p.215

8500
Stainless steel window drive
p.241

5.1 Metal frame - Lever handles

Stainless steel metal frame lever handle
5072 Memphis

EN 1906
KL 3/4

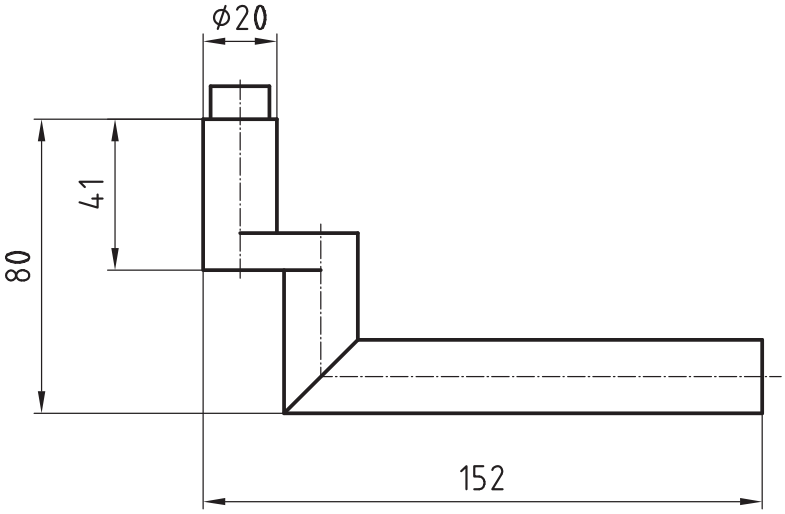

Standard version
- Lever handle length 152 mm, ø 20 mm
- Projection 80 mm
- Square spindle 8 mm
- Satin stainless steel
- 16 mm guide for Glutz glide / needle bearing (NL) / easyfix®
- Picture shows handle with 5618C rose

Options
- Polished stainless steel
- RAL lacquered
- PVD lacquered
- Square spindle 8,5 mm or 9 mm
- 16 mm guide for Glutz twin glide
- Category of use class 4, EN 1906: 2002-05

Quality standard
- Category of use class 3, EN 1906: 2002-05
- Tested for use in fire-rated and smoke protection doors to DIN 18273: 1997-12

5071
Stainless steel lever handle
p.46

5073
Stainless steel lever handle
p.47

50661
Stainless steel metal frame lever handle
p.147

5071/5616 CF
Stainless steel window handle
p.215

8500
Stainless steel window drive
p.241

5.1 Metal frame - Lever handles

Stainless steel metal frame lever handle
5089 Assoluto

EN 179

EN 1906
KL 3/4

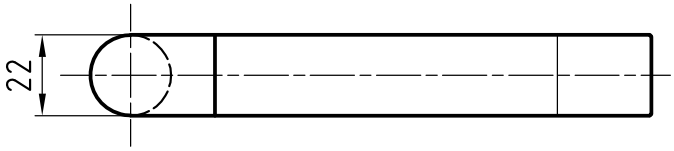

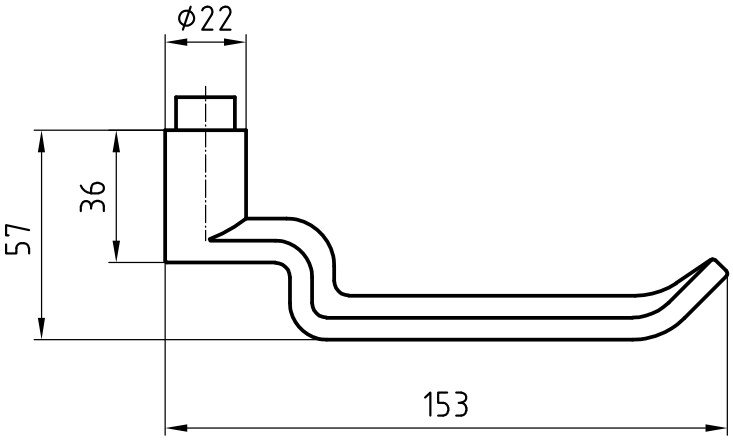

Standard version
- Lever handle length 153 mm, ø 22 mm
- Projection 57 mm
- Square spindle 8 mm
- Satin stainless steel
- 16 mm guide for Glutz glide / needle bearing (NL) / easyfix®
- Picture shows handle with 5618C rose

Options
- Polished stainless steel
- RAL lacquered
- PVD lacquered
- Square spindle 8,5 mm or 9 mm
- 16 mm guide for Glutz twin glide
- Category of use class 4, EN 1906: 2002-05

Quality standard
- Category of use class 3, EN 1906: 2002-05
- Tested for use in fire-rated and smoke protection doors to DIN 18273: 1997-12
- Admitted, combined with the appropriate lock as lever handle for emergency exits as per EN 179: 2002-06

5084
Stainless steel lever handle
p.51

5088
Stainless steel lever handle
p.53

5089/5616 CF
Stainless steel window handle
p.221

8500
Stainless steel window drive
p.241

5.1 Metal frame - Lever handles

Stainless steel metal frame lever handle

50921 München

EN 179

EN 1906
KL 3/4

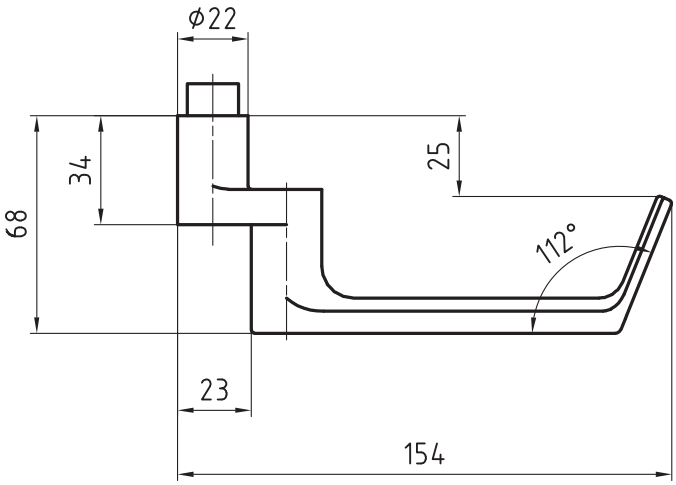

Standard version
- Lever handle length 154 mm, ø 22 mm
- Projection 68 mm
- Square spindle 8 mm
- Solid satin stainless steel
- 16 mm guide for Glutz glide / needle bearing (NL) / easyfix®
- Picture shows handle with 5618C rose

Options
- Polished stainless steel
- RAL lacquered
- PVD lacquered
- Square spindle 8,5 mm or 9 mm
- 16 mm guide for Glutz twin glide
- Category of use class 4, EN 1906: 2002-05

Quality standard
- Category of use class 3, EN 1906: 2002-05
- Tested for use in fire-rated and smoke protection doors to DIN 18273: 1997-12
- Admitted, combined with the appropriate lock as lever handle for emergency exits as per EN 179: 2002-06

5092
Stainless steel lever handle
p.55

5092/5616 CF
Stainless steel window handle
p.223

8500
Stainless steel window drive
p.241

5.1 Metal frame - Lever handles

Stainless steel metal frame lever handle

5175 Saarbrücken

EN 179

EN 1906
KL 3/4

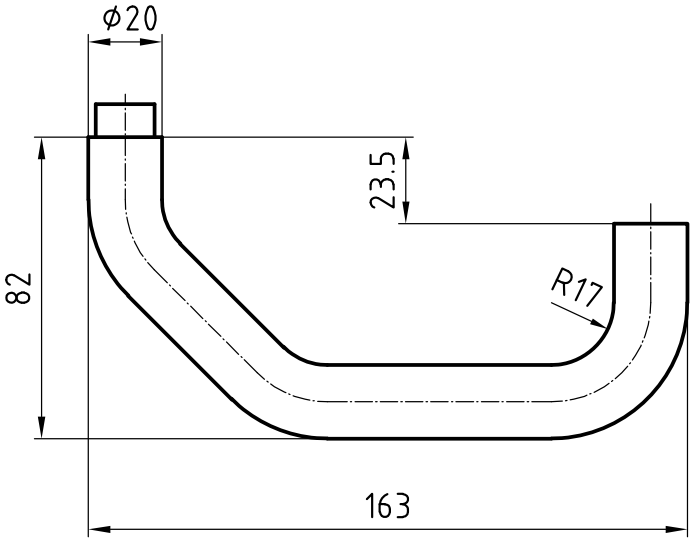

Standard version
- Lever handle length 163 mm, ø 20 mm
- Projection 82 mm
- Square spindle 8 mm
- Satin stainless steel
- 16 mm guide for Glutz glide / needle bearing (NL) / easyfix®
- Picture shows handle with 5618C rose

Options
- Polished stainless steel
- RAL lacquered
- PVD lacquered
- Square spindle 8,5 mm or 9 mm
- 16 mm guide for Glutz twin glide
- Category of use class 4, EN 1906: 2002-05

Quality standard
- Category of use class 3, EN 1906: 2002-05
- Tested for use in fire-rated and smoke protection doors to DIN 18273: 1997-12
- Admitted, combined with the appropriate lock as lever handle for emergency exits as per EN 179: 2002-06

5064
Stainless steel lever handle
p.40

5065
Stainless steel lever handle
p.41

5064A/5616 CF
Stainless steel window handle
p.211

8500
Stainless steel window drive
p.241

5.1 Metal frame - Lever handles

Stainless steel metal frame lever handle
5176 Hamburg

EN 179

EN 1906
KL 3/4

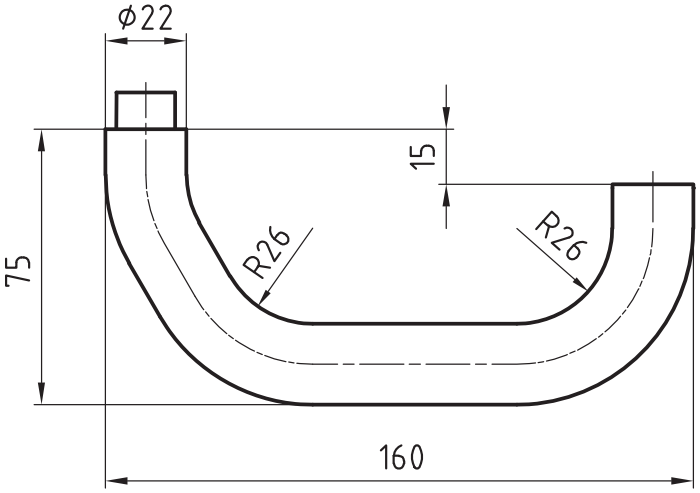

Standard version
- Lever handle length 160 mm, ø 22 mm
- Projection 75 mm
- Square spindle 8 mm
- Satin stainless steel
- 16 mm guide for Glutz glide / needle bearing (NL) / easyfix®
- Picture shows handle with 5618C rose

Options
- Polished stainless steel
- RAL lacquered
- PVD lacquered
- Square spindle 8,5 mm or 9 mm
- 16 mm guide for Glutz twin glide
- Category of use class 4, EN 1906: 2002-05

Quality standard
- Category of use class 3, EN 1906: 2002-05
- Tested for use in fire-rated and smoke protection doors to DIN 18273: 1997-12
- Admitted, combined with the appropriate lock as lever handle for emergency exits as per EN 179: 2002-06

5064
Stainless steel lever handle
p.40

5064A/5616 CF
Stainless steel window handle
p.211

8500
Stainless steel window drive
p.241

5.1 Metal frame - Lever handles

Stainless steel metal frame lever handle
6032 Greyville

EN 179

EN 1906
KL 3/4

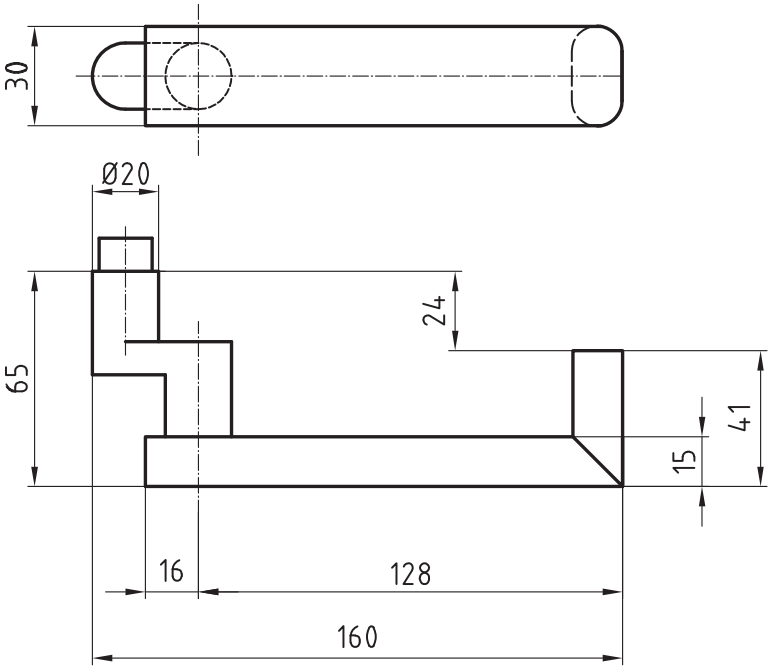

Product profile
Commercial buildings, administrative centres and superior quality residential developments

Standard version
- Lever handle length 160 mm, ø 30 mm
- Projection 65 mm
- Square spindle 8 mm
- Satin stainless steel
- 16 mm guide for Glutz glide / needle bearing (NL) / easyfix®
- Picture shows handle with 5622C rose

Options
- Polished stainless steel
- RAL lacquered
- PVD lacquered
- Square spindle 8,5 mm or 9 mm
- 16 mm guide for Glutz twin glide
- Version for narrow stile doors
- Category of use class 4, EN 1906: 2002-05

Quality standard
- Category of use class 3, EN 1906: 2002-05
- Tested for use in fire-rated and smoke protection doors to DIN 18273: 1997-12
- Admitted, combined with the appropriate lock as lever handle for emergency exits as per EN 179: 2002-06

6016
Stainless steel lever handle
p.67

6031
Stainless steel lever handle
p.70

6016-280/6143
Stainless steel handle PSK + HST
p.240

6030
Stainless steel turn
p.69

Stainless steel metal frame door knob
5825E

Standard version
- ø 50 mm
- Projection 78 mm
- 16 mm guide for fixing dead
- Inside thread M10
- Satin stainless steel
- Picture shows knob with 5618C rose

Options
- Polished stainless steel
- RAL lacquered
- PVD lacquered
- 16 mm guide for Glutz glide / needle bearing (NL) / easyfix®
- Prepared for 8 mm, 8.5 mm or 9 mm square spindle

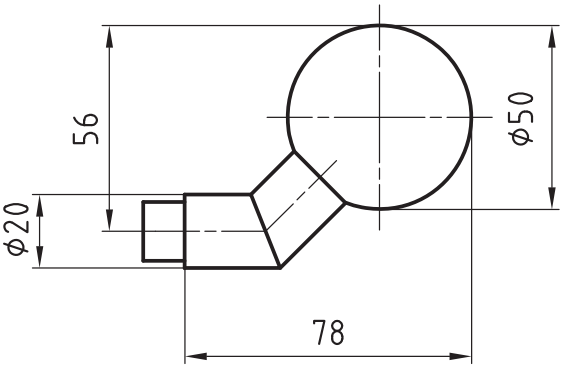

5825
Stainless steel door knob
p.74

5830
Stainless steel metal frame door knob
p.155

5838
Stainless steel metal frame door knob
p.156

5839
Stainless steel metal frame door knob
p.157

Stainless steel metal frame door knob
5830

Standard version
- ø 60 mm
- Projection 41 mm
- 16 mm guide for fixing dead
- Inside thread M10
- Satin stainless steel
- Picture shows knob with 5618C rose

Options
- ø 53 mm
- Polished stainless steel
- RAL lacquered
- PVD lacquered
- 16 mm guide for Glutz glide / needle bearing (NL) / easyfix®
- Prepared for 8 mm, 8.5 mm or 9 mm square spindle

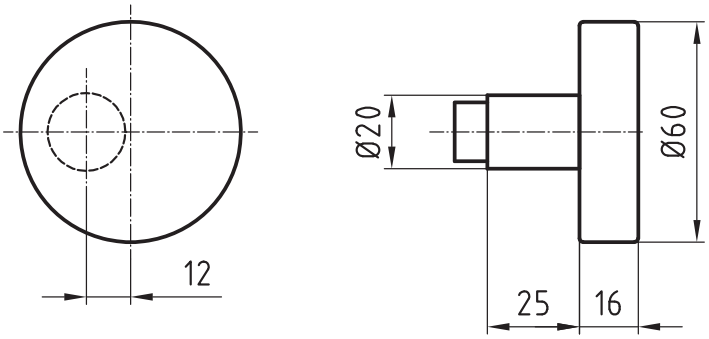

5827
Stainless steel door knob
p.75

5825E
Stainless steel metal frame door knob
p.154

5838
Stainless steel metal frame door knob
p.156

5839
Stainless steel metal frame door knob
p.157

5.2 Metal frame - Knobs

Stainless steel metal frame door knob
5838

Standard version
- ø 53 x 75 mm
- Projection 40 mm
- 16 mm guide for fixing dead
- Inside thread M10
- Solid satin stainless steel
- Picture shows knob with 5618C rose

Options
- Polished stainless steel
- RAL lacquered
- PVD lacquered
- 16 mm guide for Glutz glide / needle bearing (NL) / easyfix®
- Prepared for 8 mm, 8.5 mm or 9 mm square spindle

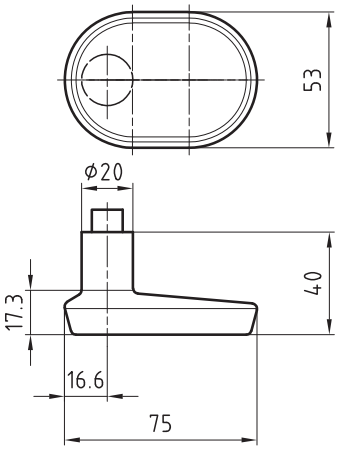

5837
Stainless steel door knob
p.78

5825E
Stainless steel metal frame door knob
p.154

5830
Stainless steel metal frame door knob
p.155

5839
Stainless steel metal frame door knob
p.157

Stainless steel metal frame door knob
5839

Standard version
- ø 53 x 74 mm
- Projection 45 mm
- 16 mm guide for fixing dead
- Inside thread M10
- Solid satin stainless steel
- Picture shows knob with 5618C rose

Options
- Polished stainless steel
- RAL lacquered
- PVD lacquered
- 16 mm guide for Glutz glide / needle bearing (NL) / easyfix®
- Prepared for 8 mm, 8.5 mm or 9 mm square spindle

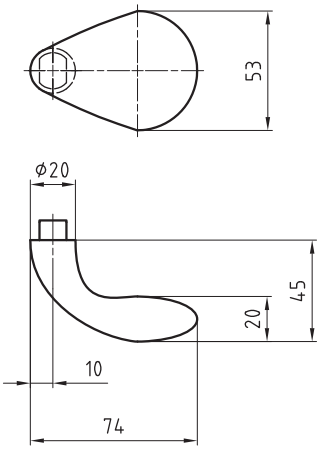

5825E
Stainless steel metal frame door knob
p.154

5830
Stainless steel metal frame door knob
p.155

5838
Stainless steel metal frame door knob
p.156

Stainless steel metal frame door knob
5840

Standard version
- ø 53 mm
- Projection 48 mm
- 16 mm guide for fixing dead
- Inside thread M10
- Solid satin stainless steel
- Picture shows knob with 5618C rose

Options
- Polished stainless steel
- RAL lacquered
- PVD lacquered
- Square spindle pin 8 mm, 8.5 mm or 9 mm

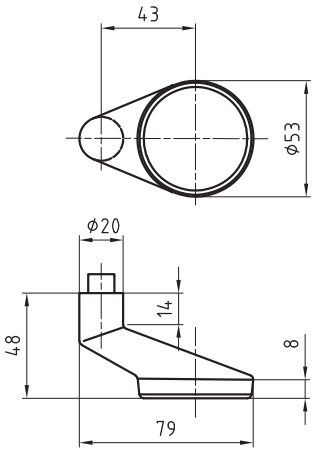

5825E
Stainless steel metal frame door knob
p.154

5830
Stainless steel metal frame door knob
p.155

5838
Stainless steel metal frame door knob
p.156

5839
Stainless steel metal frame door knob
p.157

5841
Stainless steel metal frame door knob
p.159

5.2 Metal frame - Knobs

Standard version
- ø 48 x 65 mm
- Projection 48 mm
- 16 mm guide for fixing dead
- Inside thread M10
- Solid satin stainless steel
- Picture shows knob with 5618C rose

Options
- Polished stainless steel
- RAL lacquered
- PVD lacquered
- Square spindle pin 8 mm, 8.5 mm or 9 mm

Stainless steel metal frame door knob
5841

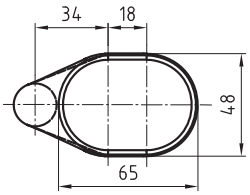

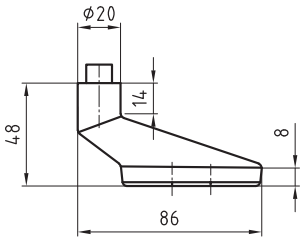

5825E
Stainless steel metal frame door knob
p.154

5830
Stainless steel metal frame door knob
p.155

5838
Stainless steel metal frame door knob
p.156

5839
Stainless steel metal frame door knob
p.157

5840
Stainless steel metal frame door knob
p.158

Product overview

6. Metal frame hardware - Roses and escutcheons

6.1 Roses

5608C Spring assisted
p. 161

5609C Spring loaded left or right
p. 162

5610C
p. 163

5310C
p. 164

6142C Spring assisted
p. 165

6143C Spring loaded left or right
p. 166

6144C
p. 167

6145C
p. 168

5311
p. 169

5315
p. 170

5316
p. 171

5317
p. 172

5612
p. 173

5392
p. 174

5615
p. 175

5394
p. 176

5618C
p. 177

5396C
p. 178

6.2 Long plates

5345-30
p. 179

5359
p. 180

5360 Extra narrow
p. 181

5361
p. 182

5364C
p. 183

Stainless steel metal frame rose

5608C Spring assisted

Standard version
- Length 72 mm
- Width 32,5 mm
- Projection 14 mm
- Satin stainless steel
- 16 mm guide for Glutz glide
- Fixing centres 50 mm
- Spring assisted
- For square spindle 8 mm

Options
- Polished stainless steel
- RAL lacquered
- PVD lacquered
- Glutz needle bearing 16 mm
- 16 mm twin, semi-outside
- Glutz easyfix®
- Knob fixing
- For square spindle 8,5 or 9 mm

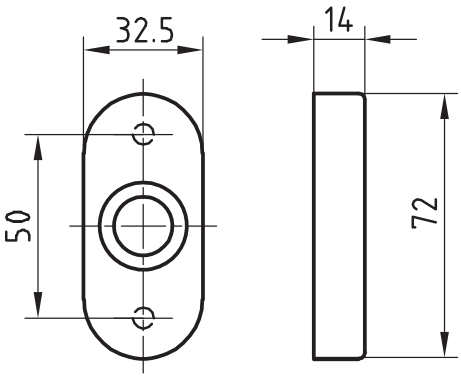

5310C
Stainless steel metal frame cylinder escutch-eon
p.164

5609C
Stainless steel metal frame rose
p.162

5610C
Stainless steel metal frame rose
p.163

5615
Stainless steel metal frame rose
p.175

5394
Stainless steel metal frame cylinder escutch-eon
p.176

Stainless steel metal frame rose

5609C Spring loaded left or right

Standard version
- Length 72 mm
- Width 32,5 mm
- Projection 14 mm
- Satin stainless steel
- 16 mm guide for Glutz glide
- Fixing centres 50 mm
- Spring loaded left or right
- For square spindle 8 mm

Options
- Polished stainless steel
- RAL lacquered
- PVD lacquered
- Glutz needle bearing 16 mm
- 16 mm twin, semi-outside
- Glutz easyfix®
- Knob fixing
- For square spindle 8,5 or 9 mm

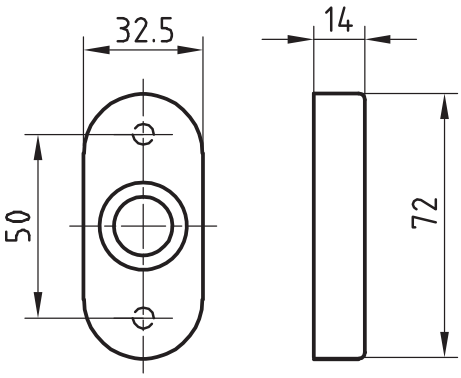

5310C
Stainless steel metal frame cylinder escutch-eon
p.164

5608C
Stainless steel metal frame rose
p.161

5610C
Stainless steel metal frame rose
p.163

5615
Stainless steel metal frame rose
p.175

5394
Stainless steel metal frame cylinder escutch-eon
p.176

Stainless steel metal frame rose
5610C

Standard version
- Length 72 mm
- Width 32,5 mm
- Projection 14 mm
- Satin stainless steel
- 16 mm guide for Glutz glide
- Fixing centres 50 mm

Options
- Polished stainless steel
- RAL lacquered
- PVD lacquered
- Glutz needle bearing 16 mm
- 16 mm twin, semi-outside
- Glutz easyfix®
- Knob fixing

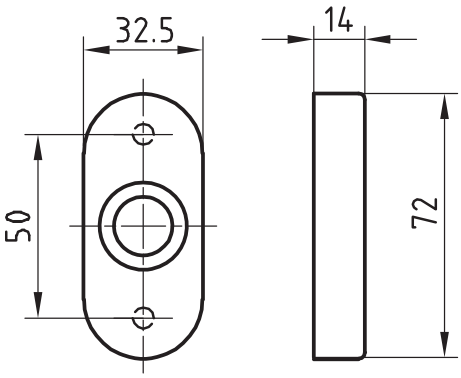

5310C
Stainless steel metal frame cylinder escutch-eon
p.164

5608C
Stainless steel metal frame rose
p.161

5609C
Stainless steel metal frame rose
p.162

5615
Stainless steel metal frame rose
p.175

5394
Stainless steel metal frame cylinder escutch-eon
p.176

6.1 Roses

Stainless steel metal frame cylinder escutcheon
5310C

Standard version
- Length 72 mm
- Width 32,5 mm
- Projection 14 mm
- Satin stainless steel
- Fixing centres 50 mm

Cutout
- 5310.0C blank
- 5310.1C BB standard keyhole
- 5310.2C RZ round cylinder
- 5310.3C PZ profile cylinder
- 5310.8C PRZ
- 5310.9C OVZ oval cylinder

Options
- Polished stainless steel
- RAL lacquered
- PVD lacquered

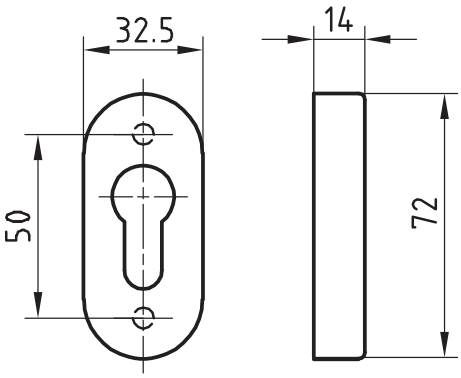

5608C
Stainless steel metal frame rose
p.161

5609C
Stainless steel metal frame rose
p.162

5610C
Stainless steel metal frame rose
p.163

5615
Stainless steel metal frame rose
p.175

5394
Stainless steel metal frame cylinder escutch-eon
p.176

Stainless steel metal frame rose
6142C Spring assisted

Standard version
- Length 72 mm
- Width 32,5 mm
- Projection 14 mm
- Satin stainless steel
- 16 mm guide for Glutz glide
- Fixing centres 50 mm
- Spring assisted
- For square spindle 8 mm

Options
- Polished stainless steel
- RAL lacquered
- PVD lacquered
- Glutz needle bearing 16 mm
- 16 mm twin, semi-outside
- Glutz easyfix®
- Knob fixing
- For square spindle 8,5 or 9 mm

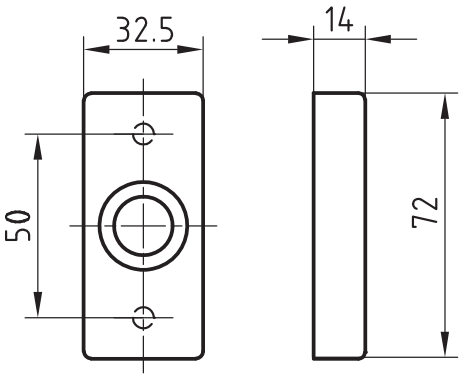

6143C
Stainless steel metal frame rose
p.166

6144C
Stainless steel metal frame rose
p.167

6145C
Stainless steel metal frame cylinder escutch-eon
p.168

6.1 Roses

Standard version
- Length 72 mm
- Width 32,5 mm
- Projection 14 mm
- Satin stainless steel
- 16 mm guide for Glutz glide
- Fixing centres 50 mm
- Spring loaded left or right
- For square spindle 8 mm

Options
- Polished stainless steel
- RAL lacquered
- PVD lacquered
- Glutz needle bearing 16 mm
- 16 mm twin, semi-outside
- Glutz easyfix®
- Knob fixing
- For square spindle 8,5 or 9 mm

Stainless steel metal frame rose
6143C Spring loaded left or right

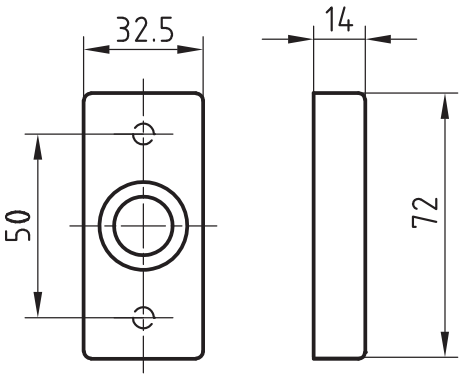

6142C
Stainless steel metal frame rose
p.165

6144C
Stainless steel metal frame rose
p.167

6145C
Stainless steel metal frame cylinder escutch-eon
p.168

Stainless steel metal frame rose
6144C

Standard version
- Length 72 mm
- Width 32,5 mm
- Projection 14 mm
- Satin stainless steel
- 16 mm guide for Glutz glide
- Fixing centres 50 mm

Options
- Polished stainless steel
- RAL lacquered
- PVD lacquered
- Glutz needle bearing 16 mm
- 16 mm twin, semi-outside
- Glutz easyfix®
- Knob fixing

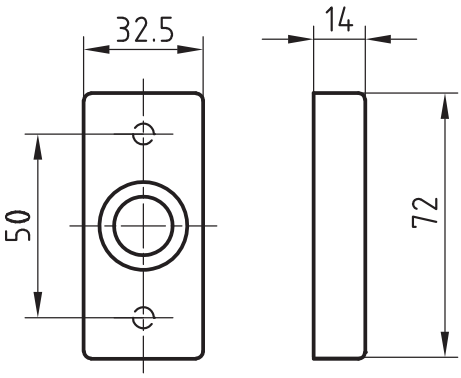

6142C
Stainless steel metal frame rose
p.165

6143C
Stainless steel metal frame rose
p.166

6145C
Stainless steel metal frame cylinder escutch-eon
p.168

Stainless steel metal frame cylinder escutcheon
6145C

Standard version
- Length 72 mm
- Width 32,5 mm
- Projection 14 mm
- Satin stainless steel
- Fixing centres 50 mm

Cutout
- 6145.0C blank
- 6145.1C BB standard keyhole
- 6145.2C RZ round cylinder
- 6145.3C PZ profile cylinder
- 6145.8C PRZ
- 6145.9C OVZ oval cylinder

Options
- Polished stainless steel
- RAL lacquered
- PVD lacquered

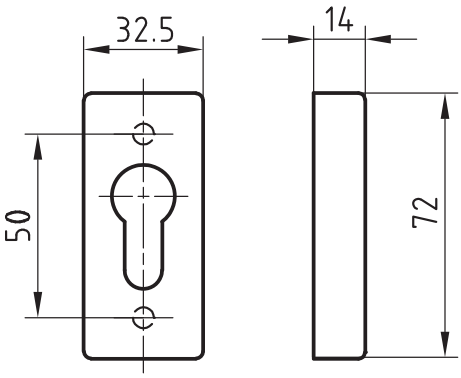

6142C
Stainless steel metal frame rose
p.165

6143C
Stainless steel metal frame rose
p.166

6144C
Stainless steel metal frame rose
p.167

Stainless steel metal frame push-on escutcheon
5311

Standard version
- Length 77 mm
- Width 32,5 mm
- Projection 14 mm
- Satin stainless steel
- Fixing centres 50 mm

Cutout
- 5311.2 RZ
- 5311.3 PZ

Options
- Polished stainless steel
- RAL lacquered
- PVD lacquered

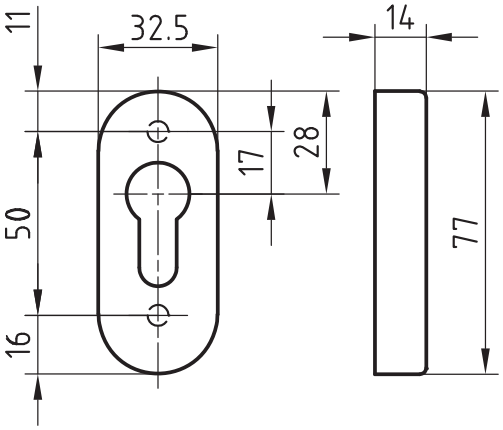

5608C
Stainless steel metal frame rose
p.161

5609C
Stainless steel metal frame rose
p.162

5610C
Stainless steel metal frame rose
p.163

5615
Stainless steel metal frame rose
p.175

6.1 Roses

Stainless steel metal frame push-on escutcheon
5315

Standard version
- Length 77 mm
- Width 32,5 mm
- Projection 14 mm
- Satin stainless steel
- Fixing centres 50 mm

- Round cylinder protection roses stainless steel
- 5315/1: cylinder projection 14-17 mm
- 5315/2: cylinder projection 17-20 mm
- 5315/3: cylinder projection 20-23 mm

Cutout
- 5315.2C RZ-RS round cylinder

Options
- Polished stainless steel
- RAL lacquered
- PVD lacquered

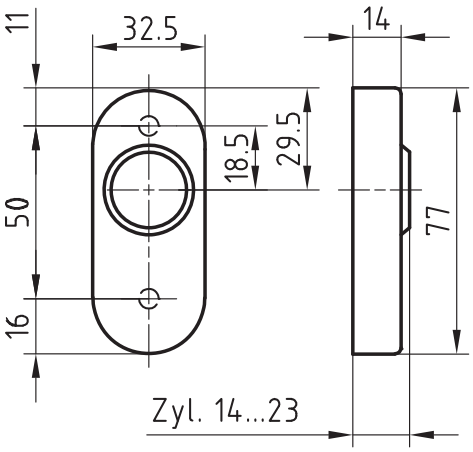

5608C
Stainless steel metal frame rose
p.161

5609C
Stainless steel metal frame rose
p.162

5610C
Stainless steel metal frame rose
p.163

5615
Stainless steel metal frame rose
p.175

Stainless steel metal frame push-on escutcheon
5316

Standard version
- Length 77 mm
- Width 32,5 mm
- Projection 14 mm
- Satin stainless steel
- Fixing centres 50 mm
- Projection of cylinder 12 - 18 mm

Cutout
- 5316.3 PZ-ZA

Options
- Polished stainless steel
- RAL lacquered
- PVD lacquered

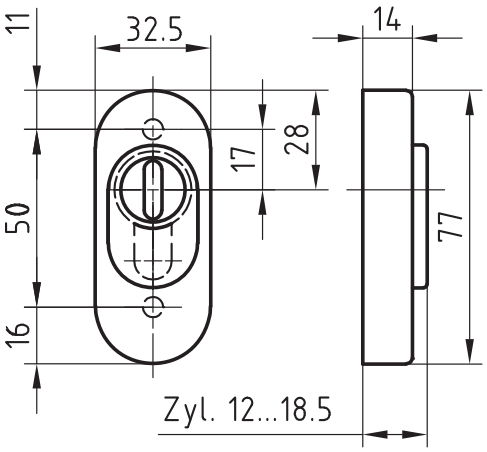

5608C
Stainless steel metal frame rose
p.161

5609C
Stainless steel metal frame rose
p.162

5610C
Stainless steel metal frame rose
p.163

5615
Stainless steel metal frame rose
p.175

6.1 Roses

Stainless steel metal frame push-on escutcheon
5317

Standard version
- Length 77 mm
- Width 32,5 mm
- Projection 14 mm
- Satin stainless steel
- Fixing centres 50 mm
- Projection of cylinder 12 - 18 mm

Cutout
- 5317.2 RZ-ZA

Options
- Polished stainless steel
- RAL lacquered
- PVD lacquered

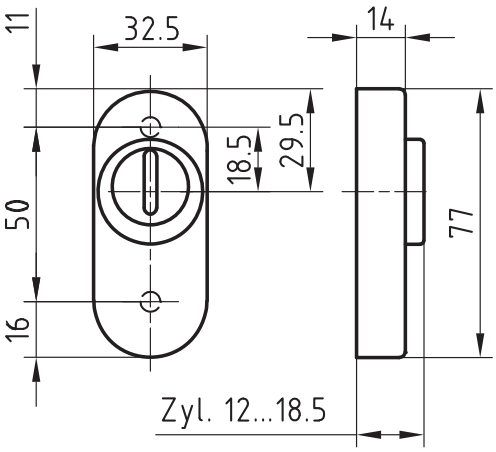

5608C
Stainless steel metal frame rose
p.161

5609C
Stainless steel metal frame rose
p.162

5610C
Stainless steel metal frame rose
p.163

5615
Stainless steel metal frame rose
p.175

Stainless steel metal frame rose
5612

Standard version
- Length 70 mm
- Width 28 mm
- Projection 2 mm
- Satin stainless steel
- 16 mm guide for Glutz glide
- Fixing centres 50 mm

Options
- Polished stainless steel
- RAL lacquered
- PVD lacquered
- Glutz needle bearing 16 mm
- 16 mm outside
- 16 mm outside, conical
- 16 mm twin, inside
- 16 mm twin, semi-outside
- 16 mm twin, outside
- Glutz easyfix®
- Knob fixing

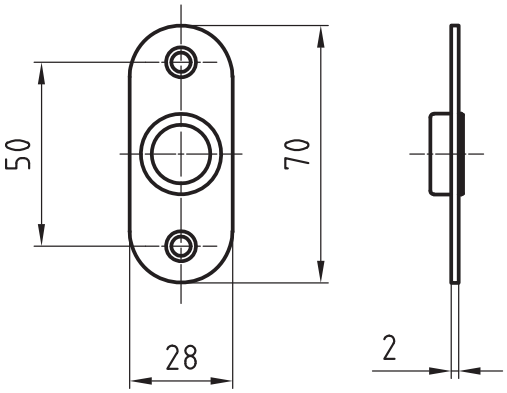

5392
Stainless steel metal frame cylinder escutch-eon
p.174

5615
Stainless steel metal frame rose
p.175

5394
Stainless steel metal frame cylinder escutch-eon
p.176

5618C
Stainless steel metal frame rose
p.177

5396C
Stainless steel metal frame cylinder escutch-eon
p.178

6.1 Roses

Standard version
- Length 70 mm
- Width 28 mm
- Projection 2 mm
- Satin stainless steel
- Fixing centres 50 mm

Cutout
- 5392.0 blank
- 5392.1 BB standard keyhole
- 5392.2 RZ round cylinder
- 5392.3 PZ profile cylinder
- 5392.8 PRZ
- 5392.9 OVZ oval cylinder

Options
- Polished stainless steel
- RAL lacquered
- PVD lacquered

Stainless steel metal frame cylinder escutcheon
5392

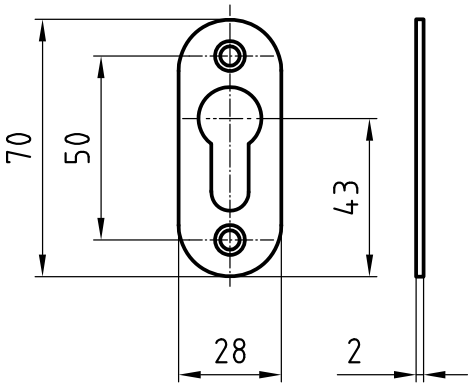

5612
Stainless steel metal frame rose
p.173

5615
Stainless steel metal frame rose
p.175

5394
Stainless steel metal frame cylinder escutch-eon
p.176

5618C
Stainless steel metal frame rose
p.177

5396C
Stainless steel metal frame cylinder escutch-eon
p.178

Stainless steel metal frame rose
5615

Standard version
- Length 65 mm
- Width 28 mm
- Projection 8 mm
- Satin stainless steel
- 16 mm guide for Glutz glide
- Fixing centres 50 mm

Options
- Polished stainless steel
- RAL lacquered
- PVD lacquered
- Glutz needle bearing 16 mm
- 16 mm twin, semi-outside
- Glutz easyfix®
- Knob fixing

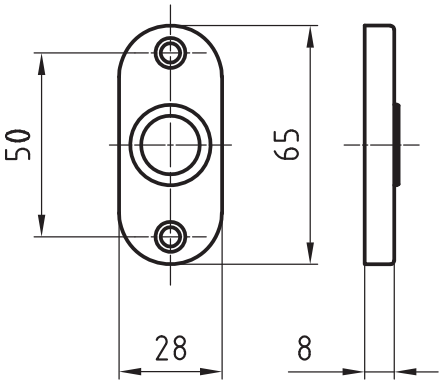

5394
Stainless steel metal frame cylinder escutch-eon
p.176

5612
Stainless steel metal frame rose
p.173

5392
Stainless steel metal frame cylinder escutch-eon
p.174

5618C
Stainless steel metal frame rose
p.177

5396C
Stainless steel metal frame cylinder escutch-eon
p.178

Stainless steel metal frame cylinder escutcheon
5394

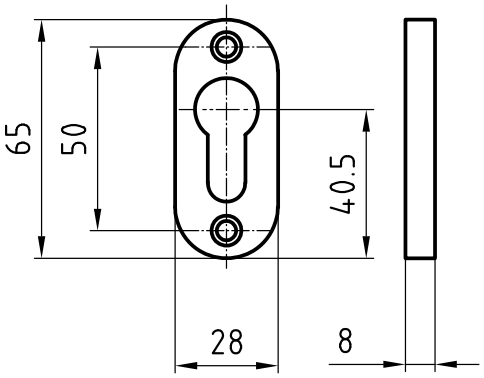

Standard version
- Length 65 mm
- Width 28 mm
- Projection 8 mm
- Satin stainless steel
- Fixing centres 50 mm

Cutout
- 5394.0 blank
- 5394.1 BB standard keyhole
- 5394.2 RZ round cylinder
- 5394.3 PZ profile cylinder
- 5394.8 PRZ
- 5394.9 OVZ oval cylinder

Options
- Polished stainless steel
- RAL lacquered
- PVD lacquered

5615
Stainless steel metal frame rose
p.175

5612
Stainless steel metal frame rose
p.173

5392
Stainless steel metal frame cylinder escutch-eon
p.174

5618C
Stainless steel metal frame rose
p.177

5396C
Stainless steel metal frame cylinder escutch-eon
p.178

Stainless steel metal frame rose
5618C

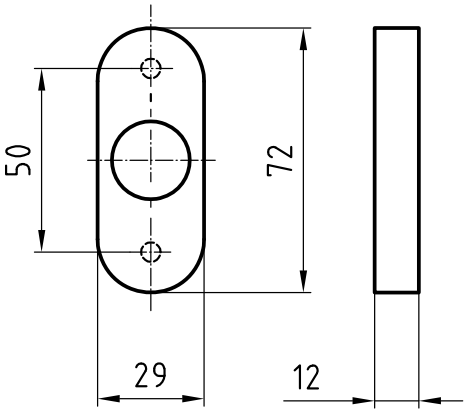

Standard version
- Length 72 mm
- Width 29 mm
- Projection 12 mm
- Satin stainless steel
- 16 mm guide for Glutz glide
- Fixing centres 50 mm

Cutout
- 5618.19C cutout for handles ø 18 mm
- 5618.21C cutout for handles ø 20 mm
- 5618.23C cutout for handles ø 22 mm

Options
- Polished stainless steel
- RAL lacquered
- PVD lacquered
- Glutz needle bearing 16 mm
- 16 mm twin, semi-outside
- Glutz easyfix®
- Knob fixing

5396C
Stainless steel metal frame cylinder escutch-eon
p.178

5612
Stainless steel metal frame rose
p.173

5392
Stainless steel metal frame cylinder escutch-eon
p.174

5615
Stainless steel metal frame rose
p.175

5394
Stainless steel metal frame cylinder escutch-eon
p.176

Stainless steel metal frame cylinder escutcheon
5396C

Standard version
- Length 72 mm
- Width 29 mm
- Projection 12 mm
- Satin stainless steel
- Fixing centres 50 mm

Cutout
- 5396.0C blank
- 5396.1C BB standard keyhole
- 5396.2C RZ round cylinder
- 5396.3C PZ profile cylinder
- 5396.8C PRZ
- 5396.9C OVZ oval cylinder

Options
- Polished stainless steel
- RAL lacquered
- PVD lacquered

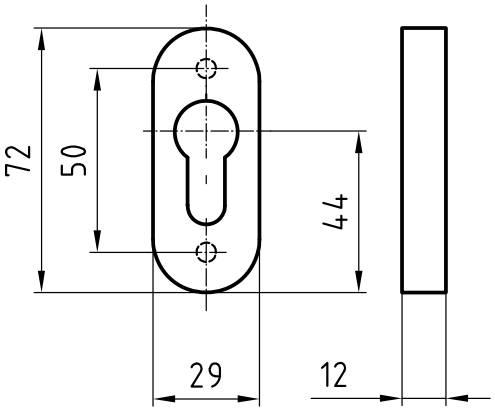

5618C
Stainless steel metal frame rose
p.177

5612
Stainless steel metal frame rose
p.173

5392
Stainless steel metal frame cylinder escutch-eon
p.174

5615
Stainless steel metal frame rose
p.175

5394
Stainless steel metal frame cylinder escutch-eon
p.176

6.2 Long plates

Stainless steel metal frame long plate
5345-30

Standard version
- Length 235 mm
- Width 30 mm
- Projection 2 mm
- Satin stainless steel
- 16 mm guide for Glutz glide

Cutout
- 5345.00 blind
- 5345.0 blank
- 5345.1 BB standard keyhole
- 5345.2 RZ round cylinder
- 5345.3 PZ profile cylinder
- 5345.8 PRZ
- 5345.9 OVZ oval cylinder

Options
- Polished stainless steel
- RAL lacquered
- PVD lacquered
- Glutz needle bearing 16 mm
- 16 mm outside
- 16 mm outside, conical
- 16 mm twin, inside
- 16 mm twin, semi-outside
- 16 mm twin, outside
- 16 mm twin, outside, conical
- Glutz easyfix®
- Knob fixing

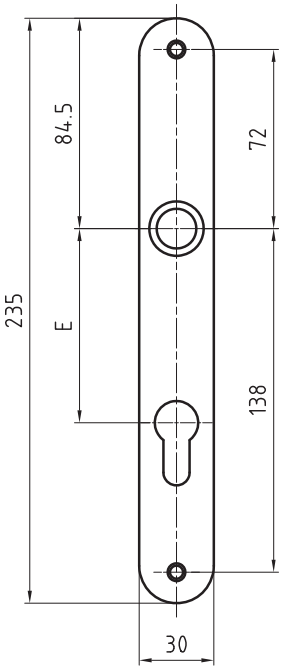

5345
Stainless steel long plate
p.107

5345.4
Stainless steel long plate for bathrooms
p.84

5345S
Stainless steel long plate
p.108

5345E
Stainless steel long plate
p.109

6.2 Long plates

Stainless steel metal frame long plate
5359

Standard version
- Length 250 mm
- Width 30 mm
- Projection 2 mm
- Satin stainless steel
- 16 mm guide for Glutz glide
- Fixing holes M5

Cutout
- 5359.00 blind
- 5359.0 blank
- 5359.1 BB standard keyhole
- 5359.2 RZ round cylinder
- 5359.3 PZ profile cylinder
- 5359.8 PRZ
- 5359.9 OVZ oval cylinder

Options
- Polished stainless steel
- RAL lacquered
- PVD lacquered
- Glutz needle bearing 16 mm
- 16 mm outside
- 16 mm outside, conical
- 16 mm twin, inside
- 16 mm twin, semi-outside
- 16 mm twin, outside
- 16 mm twin, outside, conical
- Glutz easyfix®
- Knob fixing
- Fixing holes M6
- Threaded cam M5
- Threaded cam M6

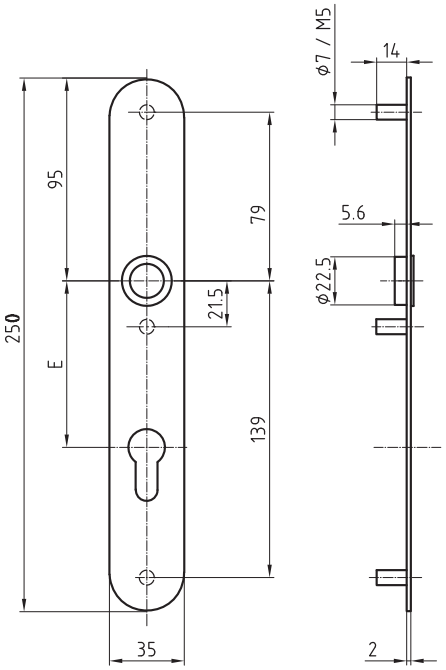

5345
Stainless steel long plate
p.107

5345.4
Stainless steel long plate for bathrooms
p.84

5345S
Stainless steel long plate
p.108

5345E
Stainless steel long plate
p.109

6.2 Long plates

Stainless steel metal frame long plate
5360 Extra narrow

Standard version
- Length 255 mm
- Width 32 mm
- Projection 6 mm
- Satin stainless steel
- Guide 16 mm with Glutz glide outside
- With 3 fixing holes M5

Cutout
- 5360.00 blind
- 5360.0 blank
- 5360.1 BB standard keyhole
- 5360.2 RZ round cylinder
- 5360.3 PZ profile cylinder
- 5360.8 PRZ
- 5360.9 OVZ oval cylinder

Options
- Polished stainless steel
- RAL lacquered
- PVD lacquered
- Glutz needle bearing 16 mm
- 16 mm outside, conical
- 16 mm twin, inside
- 16 mm twin, semi-outside
- 16 mm twin, outside
- 16 mm twin, outside, conical
- Glutz easyfix®
- Knob fixing

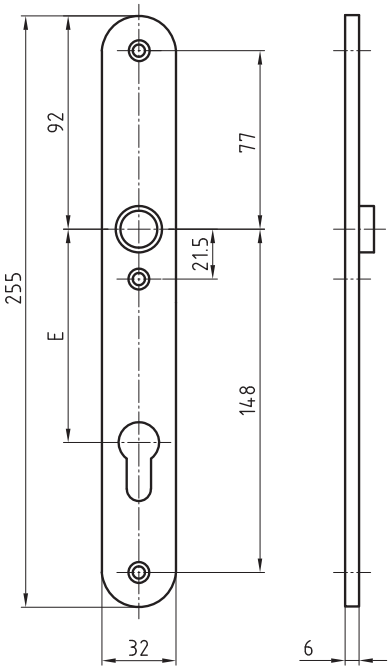

5361
Stainless steel metal frame long plate
p.182

6.2 Long plates

Stainless steel metal frame long plate

5361 Extra narrow

Standard version
- Length 255 mm
- Width 32 mm
- Projection 6 mm
- Satin stainless steel
- Guide 16 mm with Glutz glide outside
- With 3 M5 threaded cams

Cutout
- 5361.00 blind
- 5361.0 blank
- 5361.1 BB standard keyhole
- 5361.2 RZ round cylinder
- 5361.3 PZ profile cylinder
- 5361.8 PRZ
- 5361.9 OVZ oval cylinder

Options
- Polished stainless steel
- RAL lacquered
- PVD lacquered
- Glutz needle bearing 16 mm
- 16 mm outside
- 16 mm outside, conical
- 16 mm twin, inside
- 16 mm twin, semi-outside
- 16 mm twin, outside
- 16 mm twin, outside, conical
- Glutz easyfix®
- Knob fixing

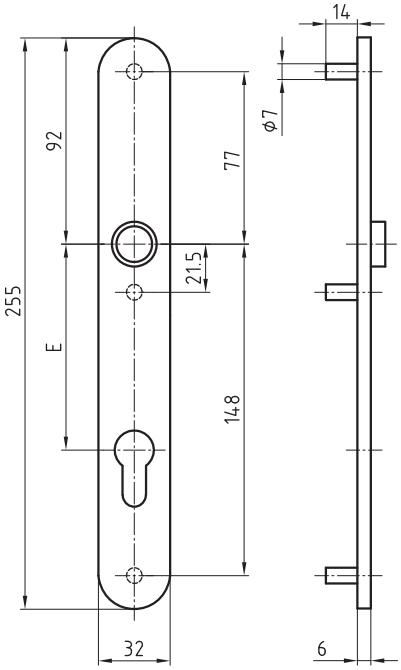

5360
Stainless steel metal frame long plate
p.181

6.2 Long plates

Stainless steel metal frame clip on long plate
5364C

Standard version
- Length 250 mm
- Width 35 mm
- Projection 8 mm
- Satin stainless steel
- 16 mm guide for Glutz glide
- Base plate on one side with guided cam CN
- Base plate on one side with threaded cam M4 CG

Cutout
- 5364.0C blank
- 5364.1C BB standard keyhole
- 5364.2C RZ round cylinder
- 5364.3C PZ profile cylinder
- 5364.8C PRZ
- 5364.9C OVZ oval cylinder
- Cutouts for lever handles
- .19 for lever handles ø 18 mm
- .21 for lever handles ø 20 mm
- .23 for lever handles ø 22 mm

Options
- Polished stainless steel
- RAL lacquered
- PVD lacquered
- Glutz needle bearing 16 mm
- 16 mm twin, semi-outside
- 16 mm twin, outside
- Glutz easyfix®
- Knob fixing

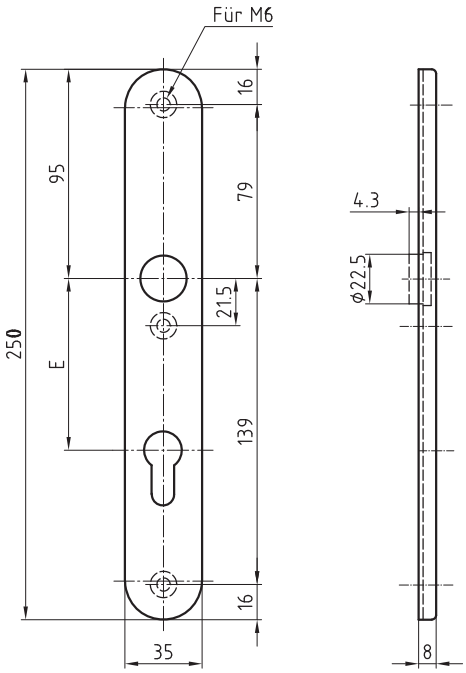

Product overview

7. Metal frame hardware - security plates

7.1 Metal frame - Secaport

5472
p. 185

5473
p. 186

5474
p. 187

5476
p. 188

5477
p. 189

5478
p. 190

5479
p. 191

5363C
p. 192

7.1 Metal frame - Secaport

Stainless steel security plate ES 1
5472

ES 1

Product profile
Tested to DIN 18257-ES1-L (2003-03)
EN 1906 resistance class 2 (2002-05)
For burglar resistant doors according to ENV 1627 - 1630 WK 1+2 (1999-01)

Standard version
- Satin stainless steel
- Guide 16 mm for Glutz glide
- Outer plate 250x35x12 mm
- Perforated for profile cylinder
- Perforated for round cylinder 22 mm
- Inside plate 5363.3C straight 8 mm

- **CENTRES**
- PZ: 78 mm, 88mm, 92 mm
- PZ: 72 mm, 78 mm, 92 mm

Options
- Polished stainless steel
- RAL lacquered
- PVD lacquered
- Perforated for round cylinder 22 mm
- Glutz needle bearing 16 mm
- 16 mm twin, semi-outside
- Knob fixing
- Glutz easyfix®
- Inside plate 5359

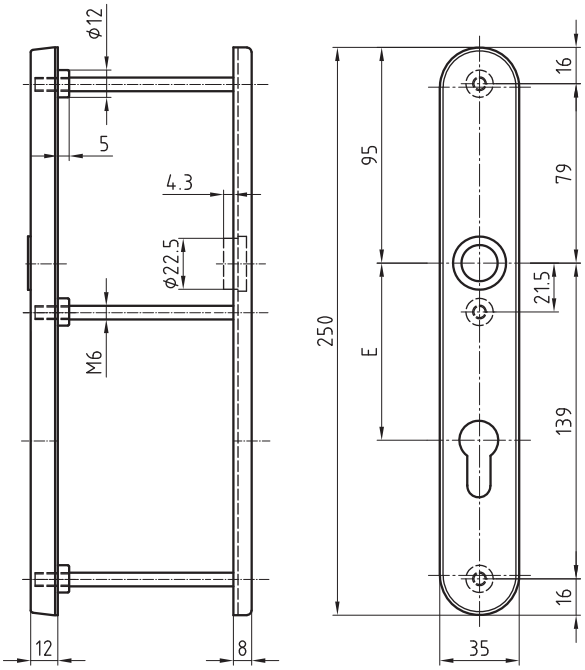

5473
Stainless steel security plate ES 1
p.186

5474
Stainless steel security plate ES 1
p.187

7.1 Metal frame - Secaport

Stainless steel security plate ES 1
5473

ES 1

Product profile
Tested to DIN 18257-ES1-L (2003-03)
EN 1906 resistance class 2 (2002-05)
For burglar resistant doors according to ENV 1627 - 1630 WK 1+2 (1999-01)

Standard version
- Satin stainless steel
- Guide 16 mm for Glutz glide
- Outer plate 250x35x12 mm, prepared for RZ protection rose
- Inside plate 5363.2C straight 8 mm

- **CENTRES**
- RZ: 74 mm, 78 mm, 94 mm

- Round cylinder protection roses stainless steel
- 5473/1: cylinder projection 10-15 mm
- 5473/2: cylinder projection 15-18 mm
- 5473/1: cylinder projection 18-21 mm

Options
- Polished stainless steel
- RAL lacquered
- PVD lacquered
- Glutz needle bearing 16 mm
- 16 mm twin, semi-outside
- Knob fixing
- Glutz easyfix®
- Inside plate 5359

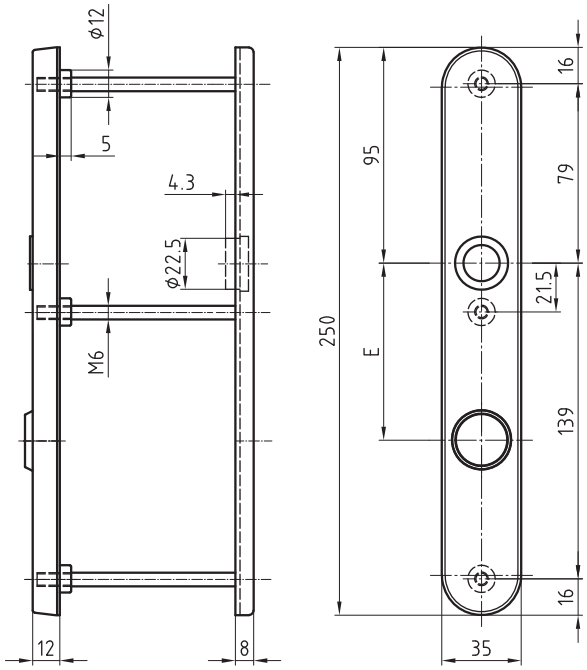

5472
Stainless steel security plate ES 1
p.185

5474
Stainless steel security plate ES 1
p.187

7.1 Metal frame - Secaport

Stainless steel security plate ES 1
5474

ES 1

Product profile
Tested to DIN 18257-ES1-L-ZA (2003-03)
EN 1906 resistance class 2 (2002-05)
For burglar resistant doors according to
ENV 1627 - 1630 WK 1+2 (1999-01)

Standard version
- Satin stainless steel
- Guide 16 mm for Glutz glide
- Outer plate 250x35x12 mm
- Profile cylinder cover 9-16 mm
- Inside plate 5363.3C straight 8 mm

- **CENTRES**
- PZ: 78 mm, 88mm, 92 mm

Options
- Polished stainless steel
- RAL lacquered
- PVD lacquered
- Glutz needle bearing 16 mm
- 16 mm twin, semi-outside
- Knob fixing
- Glutz easyfix®
- Inside plate 5359

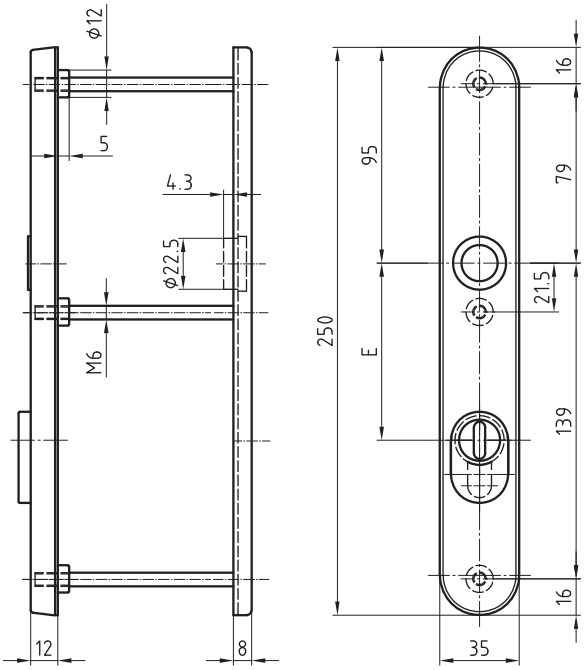

5472
Stainless steel security plate ES 1
p.185

5473
Stainless steel security plate ES 1
p.186

7.1 Metal frame - Secaport

Stainless steel long security plate ES 2
5476

ES 2

Product profile
Tested to DIN 18257-ES2-L (2003-03)
EN 1906 resistance class 3 (2002-05)
For burglar resistant doors according to ENV 1627 - 1630 WK 3 (1999-01)

Standard version
- Satin stainless steel
- Guide 16 mm for Glutz glide
- Outer plate 250x40x13,5 mm
- Perforated for profile cylinder
- Perforated for round cylinder 22 mm
- Inside plate 5363.2C RZ, 5363.3C PZ straight 8 mm

- **CENTRES**
- PZ: 78 mm, 88mm, 92 mm
- RZ: 74 mm, 88 mm, 94 mm

Options
- Polished stainless steel
- RAL lacquered
- PVD lacquered
- Perforated for round cylinder 22 mm
- Glutz needle bearing 16 mm
- 16 mm twin, semi-outside
- Knob fixing
- Glutz easyfix®
- Inside plate 5359

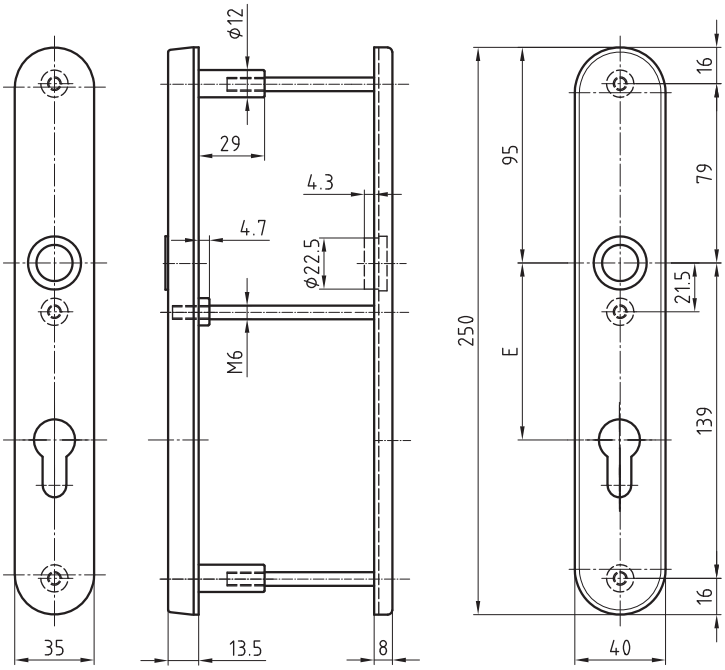

5477
Stainless steel long security plate ES 2
p.189

5478
Stainless steel long security plate ES 2
p.190

5479
Stainless steel long security plate ES 2
p.191

7.1 Metal frame - Secaport

Stainless steel long security plate ES 2
5477

ES 2

Product profile
Tested to DIN 18257-ES2-L (2003-03)
EN 1906 resistance class 3 (2002-05)
For burglar resistant doors according to ENV 1627 - 1630 WK 3 (1999-01)

Standard version
- Satin stainless steel
- Guide 16 mm for Glutz glide
- Outer plate 250x40x13,5 mm, prepared for RZ protection rose
- Inside plate 5363.2C straight 8 mm

- **CENTRES**
- RZ: 74 mm, 78 mm, 94 mm

- Round cylinder protection roses stainless steel
- 5477/1: cylinder projection 9-13 mm
- 5477/2: cylinder projection 13-16 mm
- 5477/3: cylinder projection 16-19 mm
- 5477/4: cylinder projection 19-22 mm

Options
- Polished stainless steel
- RAL lacquered
- PVD lacquered
- Glutz needle bearing 16 mm
- 16 mm twin, semi-outside
- Knob fixing
- Glutz easyfix®
- Inside plate 5359

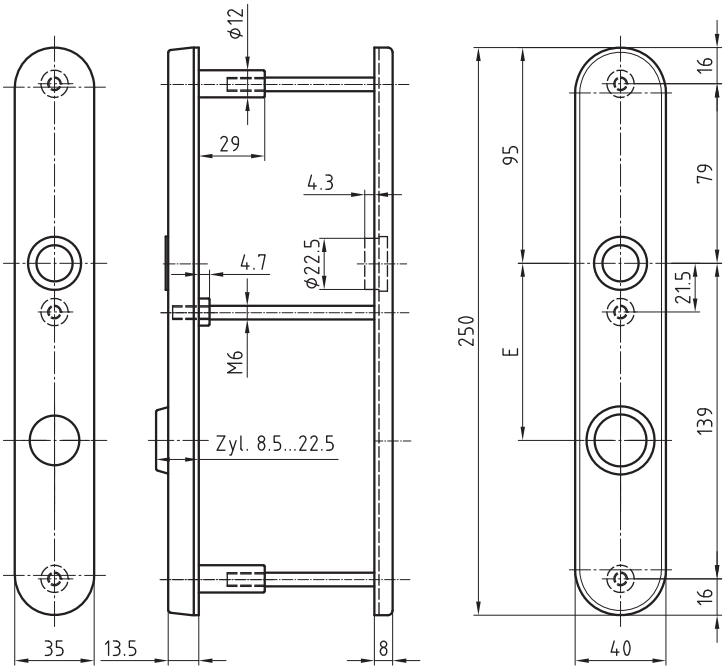

5476
Stainless steel long security plate ES 2
p.188

5478
Stainless steel long security plate ES 2
p.190

5479
Stainless steel long security plate ES 2
p.191

7.1 Metal frame - Secaport

Stainless steel long security plate ES 2
5478

ES 2

Product profile
Tested to DIN 18257-ES1-L-ZA (2003-03)
EN 1906 resistance class 3 (2002-05)
For burglar resistant doors according to
ENV 1627 - 1630 WK 3 (1999-01)

Standard version
- Satin stainless steel
- Guide 16 mm for Glutz glide
- Outer plate 250x40x13,5 mm
- Profile cylinder cover 9-16 mm
- Inside plate 5363.3C straight 8 mm

- **CENTRES**
- PZ: 78 mm, 88mm, 92 mm

Options
- Polished stainless steel
- RAL lacquered
- PVD lacquered
- Glutz needle bearing 16 mm
- 16 mm twin, semi-outside
- Knob fixing
- Glutz easyfix®
- Inside plate 5359

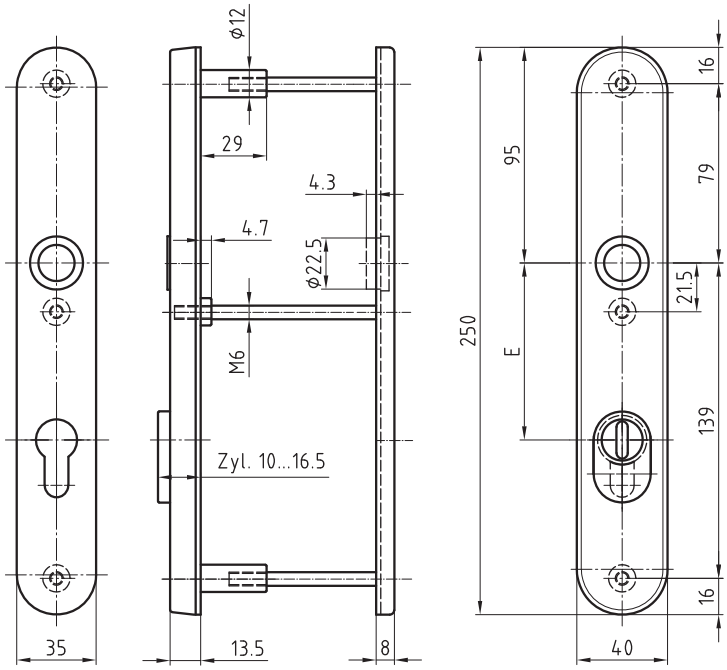

5476
Stainless steel long security plate ES 2
p.188

5477
Stainless steel long security plate ES 2
p.189

5479
Stainless steel long security plate ES 2
p.191

7.1 Metal frame - Secaport

Stainless steel long security plate ES 2
5479

ES 2

Product profile
Tested to DIN 18257-ES2-L-ZA (2003-03)
EN 1906 resistance class 3 (2002-05)
For burglar resistant doors according to ENV 1627 - 1630 WK 3 (1999-01)

Standard version
- Satin stainless steel
- Guide 16 mm for Glutz glide
- Outer plate 250x40x13.5 mm
- Round cylinder cover 10-16.5 mm
- Inside plate 5363.2C straight 8 mm

- **CENTRES**
- RZ: 74 mm, 78 mm, 94 mm

Options
- Polished stainless steel
- RAL lacquered
- PVD lacquered
- Glutz needle bearing 16 mm
- 16 mm twin, semi-outside
- Knob fixing
- Glutz easyfix®
- Inside plate 5359

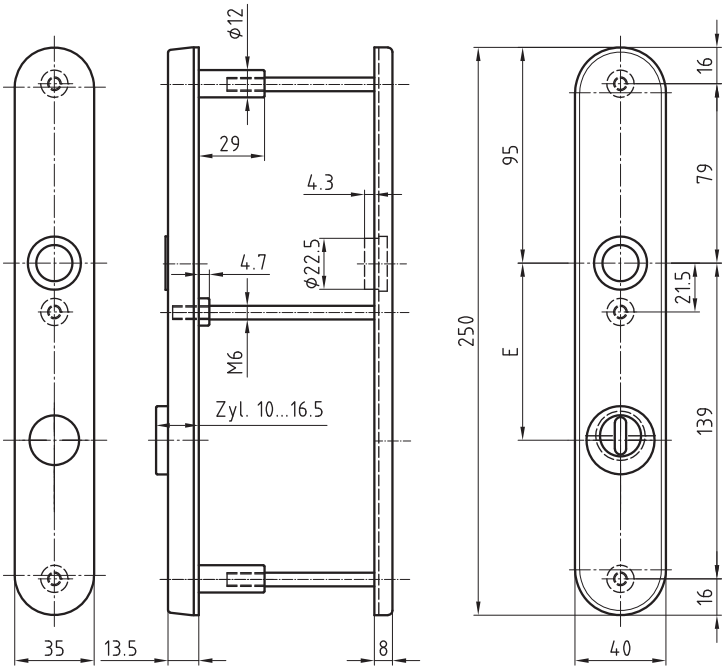

5476
Stainless steel long security plate ES 2
p.188

5477
Stainless steel long security plate ES 2
p.189

5478
Stainless steel long security plate ES 2
p.190

7.1 Metal frame - Secaport

Stainless steel metal frame long security plate
5363C

Standard version
- Length 250 mm
- Width 35 mm
- Projection 8 mm
- Satin stainless steel
- 16 mm guide for Glutz glide
- Führungsnocken M6

Cutout
- 5363.0C blank
- 5363.1C BB standard keyhole
- 5363.2C RZ round cylinder
- 5363.3C PZ profile cylinder
- 5363.8C PRZ
- 5363.9C OVZ oval cylinder
- Cutouts for lever handles
- .19 for lever handles ø 18 mm
- .21 for lever handles ø 20 mm
- .23 for lever handles ø 22 mm

Options
- Polished stainless steel
- RAL lacquered
- PVD lacquered
- Glutz needle bearing 16 mm
- 16 mm twin, semi-outside
- 16 mm twin, outside
- Glutz easyfix®
- Knob fixing

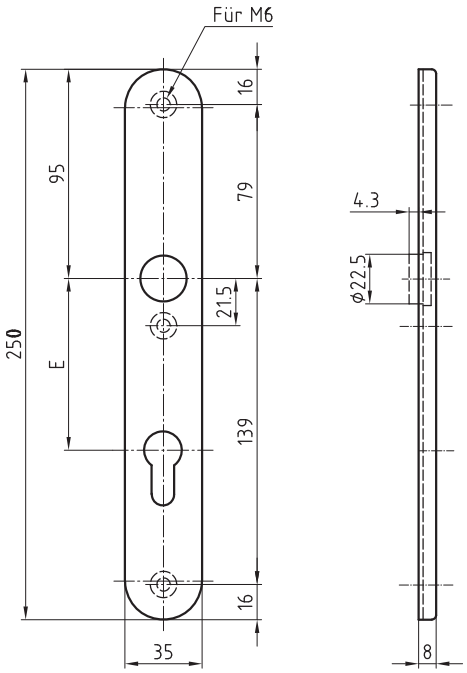

5472
Stainless steel security plate ES 1
p.185

5473
Stainless steel security plate ES 1
p.186

5474
Stainless steel security plate ES 1
p.187

Product overview

8. Window handles

8.1 Window handles

5031/5616 CF
Vicenza IV
p. 196

5036/5616 CF
Vienna
p. 197

5037/5616 CF
Florence
p. 198

5038/5616 CF
Lugano
p. 199

5039/5616 CF
Lucerne
p. 200

5040/5616 CF
Mercury
p. 201

5046/5616 CF
Paris
p. 202

5050/5616 CF
Piraeus
p. 203

5052/5616 CF
Biel
p. 204

5054/5616 CF
Uppsala
p. 205

5056/5616 CF
Berlin
p. 206

5057/5616 CF
Thun
p. 207

5060/5616 CF
Zug
p. 208

5061/5616 CF
Jackson
p. 209

5062/5616 CF
New Orleans
p. 210

5064A/5616 CF
Oslo
p. 211

5068/5616 CF
Garbsen
p. 212

5069/5616 CF
Hannover
p. 213

5070/5616 CF
Berne
p. 214

5071/5616 CF
Memphis
p. 215

5073/5616 CF
Banks
p. 216

5083/5616 CF
Tulln
p. 217

5085/5616 CF
Sapphire
p. 218

5087/5616 CF
INOX Basle
p. 219

5088/5616 CF
Zurich
p. 220

5089/5616 CF
Assoluto
p. 221

5091/5616 CF
Emerald
p. 222

5092/5616 CF
München
p. 223

5093/5616 CF
George
p. 224

5094/5616 CF
Cape Town
p. 225

5099/5616 CF
Helsinki
p. 226

5715/5616 CF
p. 227

8.2 Roses

5616 DC
p. 228

5616 DCV
With cover
p. 229

5617 A
Lockable
p. 230

5617 DC
Lockable
p. 231

8.3 Handles for balcony doors

5032-280/5619K
p. 232

5036-220/5619K
p. 233

5057-280/5613
p. 234

5057-280/5619K
p. 235

5071-280/5613
p. 236

5071-280/5619K
p. 237

5155-280/5613
p. 238

5155-280/5619K
p. 239

6016-280/6143
p. 240

8.4 Window handle drive

8500
p. 241

8500 DC
p. 242

8.1 Window handles

Stainless steel window handle
5031/5616 CF Vicenza IV

Product profile
Commercial buildings, administrative centres and superior quality residential developments

Standard version
- Window handle 123,5 mm
- Solid satin stainless steel
- 4 x 90° ball stop
- Left/right applicable
- Square spindle 7x32mm
- Clip on rose 5616 CF
- 72x29x12 mm
- Projection 66 mm
- Fixing centres 43 mm
- Studs ø 9,5/12 mm
- Suitable for all tilt and turn systems

Options
- Length of square spindle 7x24, 26, 35, 40, 114 (other spindle lengths upon request)
- Polished stainless steel
- RAL lacquered
- Also available as a pair

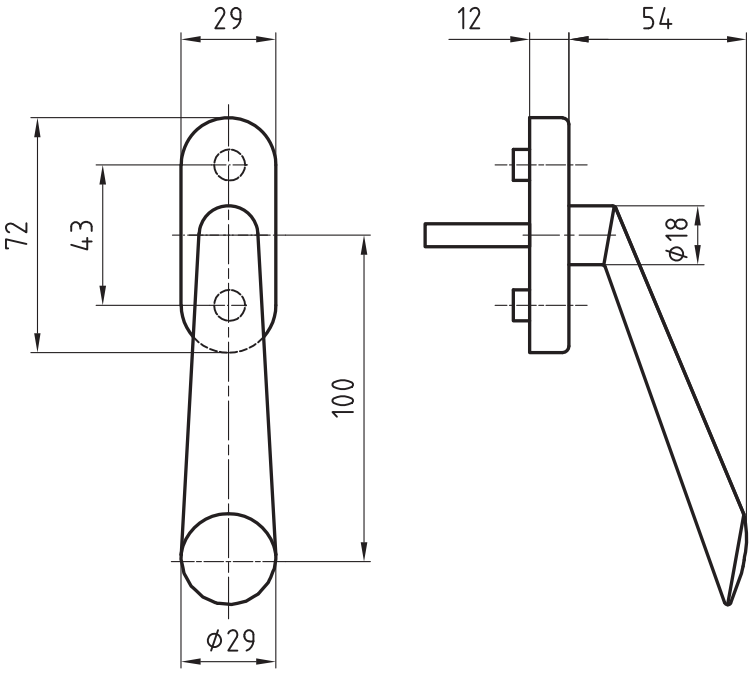

5030
Stainless steel lever handle
p.21

5130
Stainless steel lever handle
p.61

5033
Stainless steel lever handle
p.22

5032-280/5619K
Stainless steel handle PSK + HST
p.232

5617 A
Stainless steel window handle
p.230

8.1 Window handles

Stainless steel window handle
5036/5616 CF Vienna

Product profile
Commercial buildings, administrative centres and superior quality residential developments

Standard version
- Window handle 125 mm
- Solid satin stainless steel
- 4 x 90° ball stop
- Left/right applicable
- Square spindle 7x32mm
- Clip on rose 5616 CF
- 72x29x12 mm
- Projection 62 mm
- Fixing centres 43 mm
- Studs ø 9,5/12 mm
- Suitable for all tilt and turn systems

Options
- Length of square spindle 7x24, 26, 35, 40, 114 (other spindle lengths upon request)
- Polished stainless steel
- RAL lacquered
- Also available as a pair

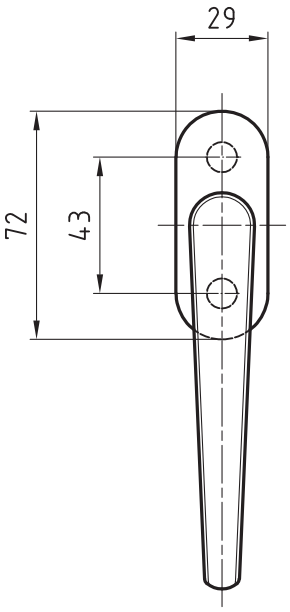

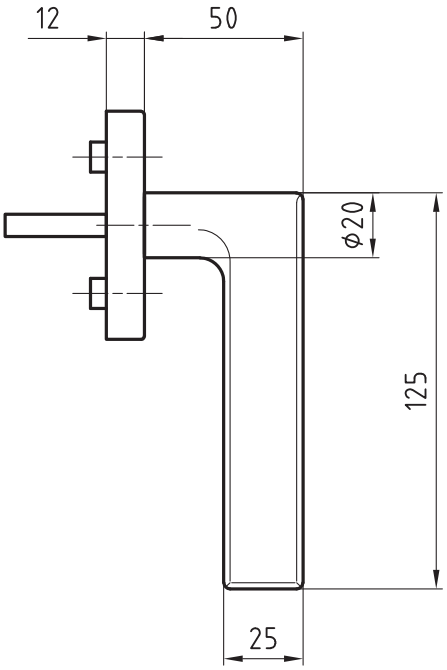

5036
Stainless steel lever handle
p.23

8500
Stainless steel window drive
p.241

5036-220/5619K
Stainless steel handle PSK + HST
p.233

5617 A
Stainless steel window handle
p.230

8.1 Window handles

Stainless steel window handle
5037/5616 CF Florence

Product profile
Commercial buildings, administrative centres and superior quality residential developments

Standard version
- Window handle 134 mm
- Solid satin stainless steel
- 4 x 90° ball stop
- Left/right applicable
- Square spindle 7x32mm
- Clip on rose 5616 CF
- 72x29x12 mm
- Projection 79 mm
- Fixing centres 43 mm
- Studs ø 9,5/12 mm
- Suitable for all tilt and turn systems

Options
- Length of square spindle 7x24, 26, 35, 40, 114 (other spindle lengths upon request)
- Polished stainless steel
- RAL lacquered
- Also available as a pair

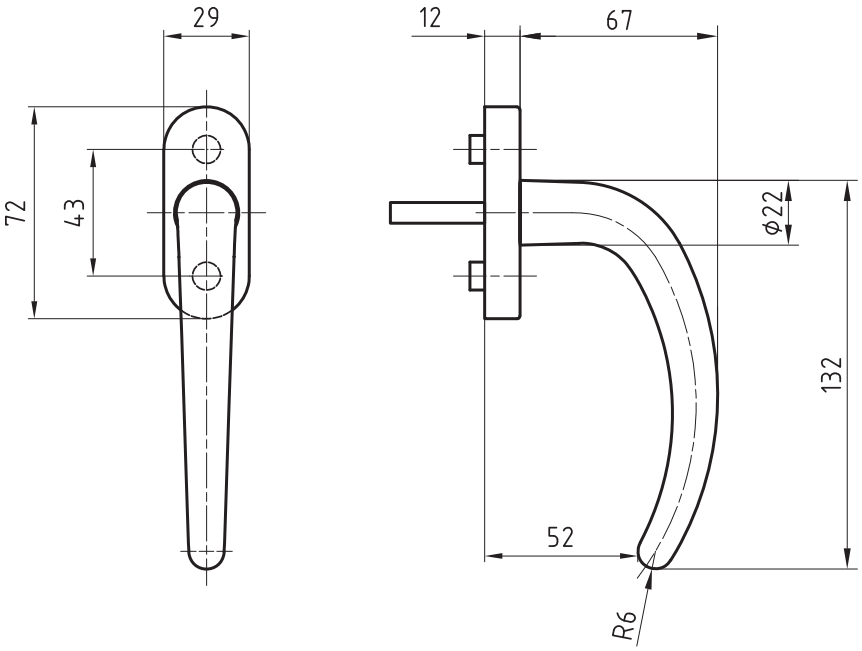

5037
Stainless steel lever handle
p.24

8500
Stainless steel window drive
p.241

5617 A
Stainless steel window handle
p.230

Stainless steel window handle

5038/5616 CF Lugano

Product profile
Commercial buildings, administrative centres and superior quality residential developments

Standard version
- Window handle 135 mm
- Solid satin stainless steel
- 4 x 90° ball stop
- Left/right applicable
- Square spindle 7x32mm
- Clip on rose 5616 CF
- 72x29x12 mm
- Projection 70 mm
- Fixing centres 43 mm
- Studs ø 9,5/12 mm
- Suitable for all tilt and turn systems

Options
- Length of square spindle 7x24, 26, 35, 40, 114 (other spindle lengths upon request)
- Polished stainless steel
- RAL lacquered
- Also available as a pair

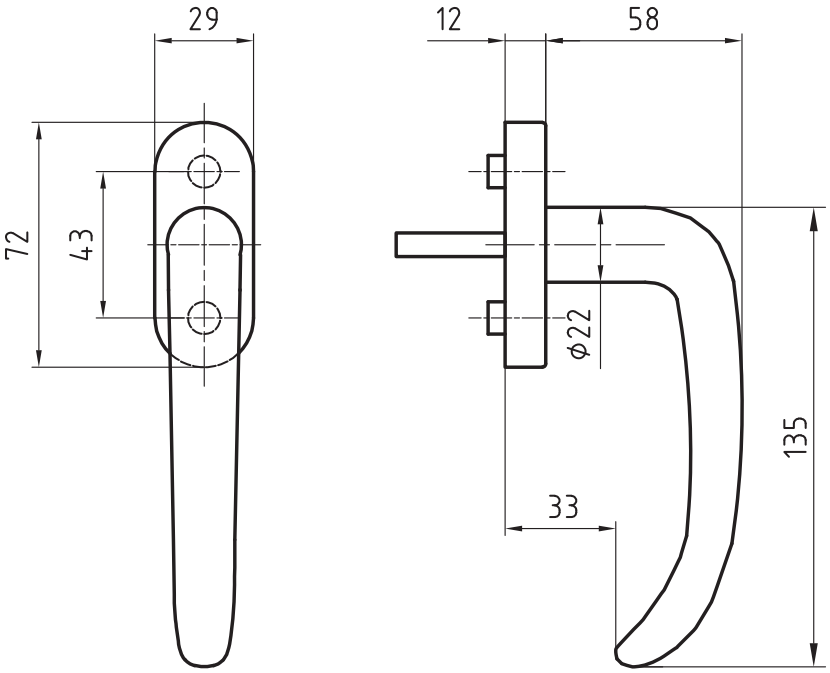

5038
Stainless steel lever handle
p.25

8500
Stainless steel window drive
p.241

5617 A
Stainless steel window handle
p.230

8.1 Window handles

Stainless steel window handle
5039/5616 CF Lucerne

Product profile
Commercial buildings, administrative centres and superior quality residential developments

Standard version
- Window handle 126 mm
- Solid satin stainless steel
- 4 x 90° ball stop
- Left/right applicable
- Square spindle 7x32mm
- Clip on rose 5616 CF
- 72x29x12 mm
- Projection 61 mm
- Fixing centres 43 mm
- Studs ø 9,5/12 mm
- Suitable for all tilt and turn systems

Options
- Length of square spindle 7x24, 26, 35, 40, 114 (other spindle lengths upon request)
- Polished stainless steel
- RAL lacquered
- Also available as a pair

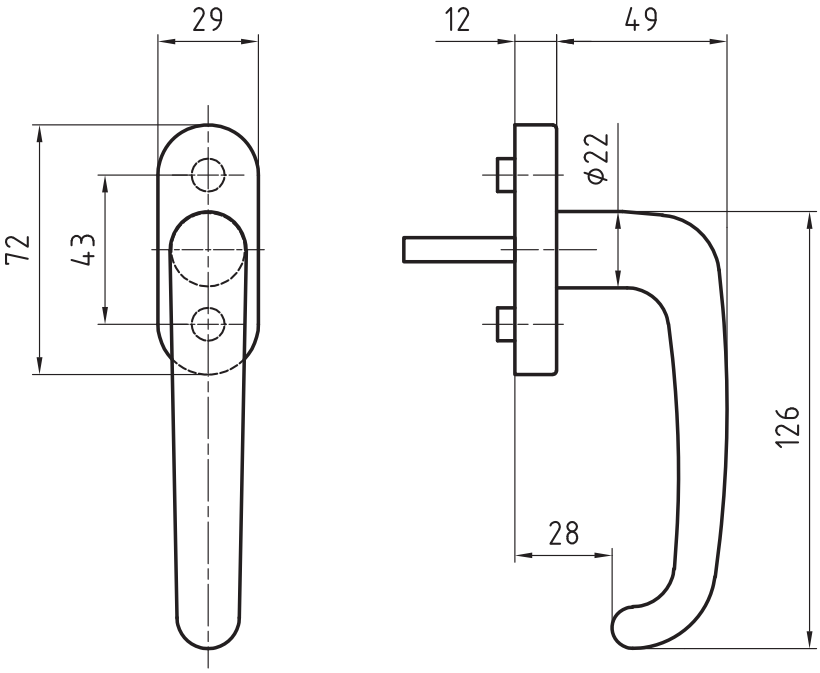

5039
Stainless steel lever handle
p.26

8500
Stainless steel window drive
p.241

5617 A
Stainless steel window handle
p.230

8.1 Window handles

Stainless steel window handle
5040/5616 CF Mercury

Product profile
Commercial buildings, administrative centres and superior quality residential developments

Standard version
- Window handle 127 mm
- Solid satin stainless steel
- 4 x 90° ball stop
- Left/right applicable
- Square spindle 7x32mm
- Clip on rose 5616 CF
- 72x29x12 mm
- Projection 70 mm
- Fixing centres 43 mm
- Studs ø 9,5/12 mm
- Suitable for all tilt and turn systems

Options
- Length of square spindle 7x24, 26, 35, 40, 114 (other spindle lengths upon request)
- Polished stainless steel
- RAL lacquered
- Also available as a pair

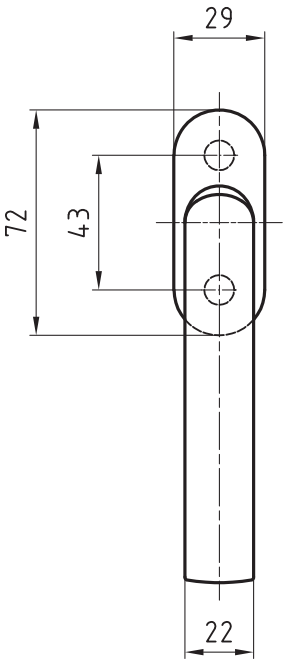

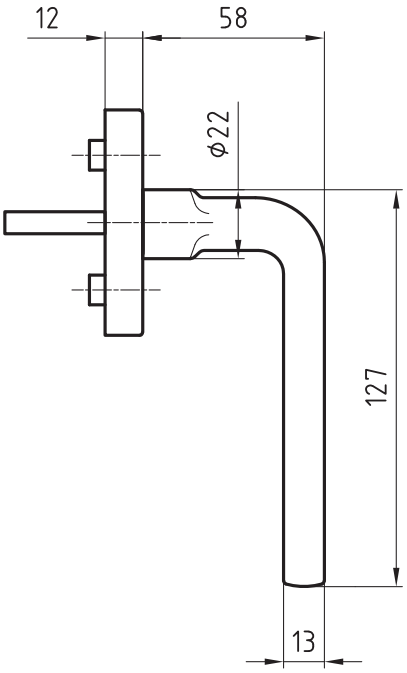

5040
Stainless steel lever handle
p.27

8500
Stainless steel window drive
p.241

5617 A
Stainless steel window handle
p.230

8.1 Window handles

Stainless steel window handle
5046/5616 CF Paris

Product profile
Commercial buildings, administrative centres, schools, residential homes

Standard version
- Window handle 144 mm, ø 20 mm
- Satin stainless steel
- 4 x 90° ball stop
- Left/right applicable
- Square spindle 7x32mm
- Clip on rose 5616 CF
- 72x29x12 mm
- Projection 105 mm
- Fixing centres 43 mm
- Studs ø 9,5/12 mm
- Suitable for all tilt and turn systems

Options
- Length of square spindle 7x24, 26, 35, 40, 114 (other spindle lengths upon request)
- Polished stainless steel
- RAL lacquered
- Also available as a pair

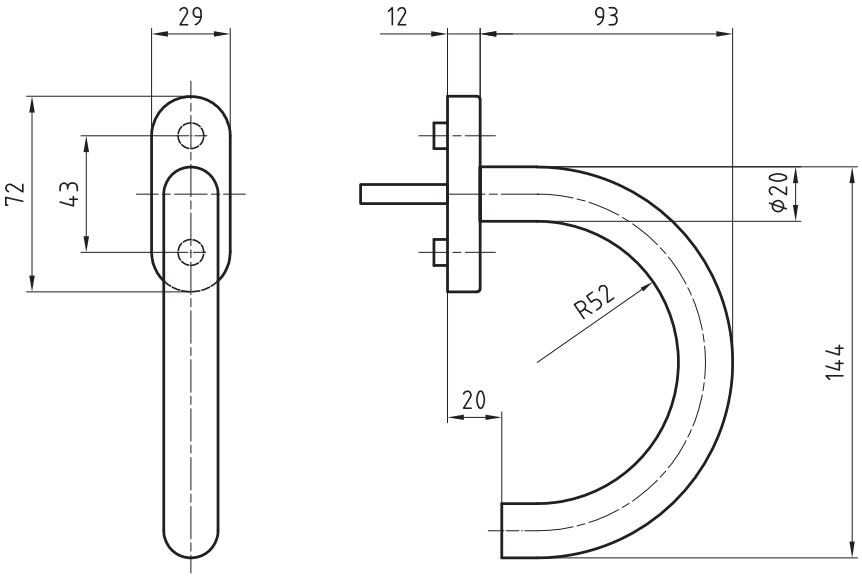

5046
Stainless steel lever handle
p.28

8500
Stainless steel window drive
p.241

5617 A
Stainless steel window handle
p.230

8.1 Window handles

Stainless steel window handle
5050/5616 CF Piraeus

Product profile
Commercial buildings, administrative centres and superior quality residential developments

Standard version
- Window handle 164 mm, ø 20 mm
- Satin stainless steel
- 4 x 90° ball stop
- Left/right applicable
- Square spindle 7x32mm
- Clip on rose 5616 CF
- 72x29x12 mm
- Projection 85 mm
- Fixing centres 43 mm
- Studs ø 9,5/12 mm
- Suitable for all tilt and turn systems

Options
- Length of square spindle 7x24, 26, 35, 40, 114 (other spindle lengths upon request)
- Polished stainless steel
- RAL lacquered
- Also available as a pair

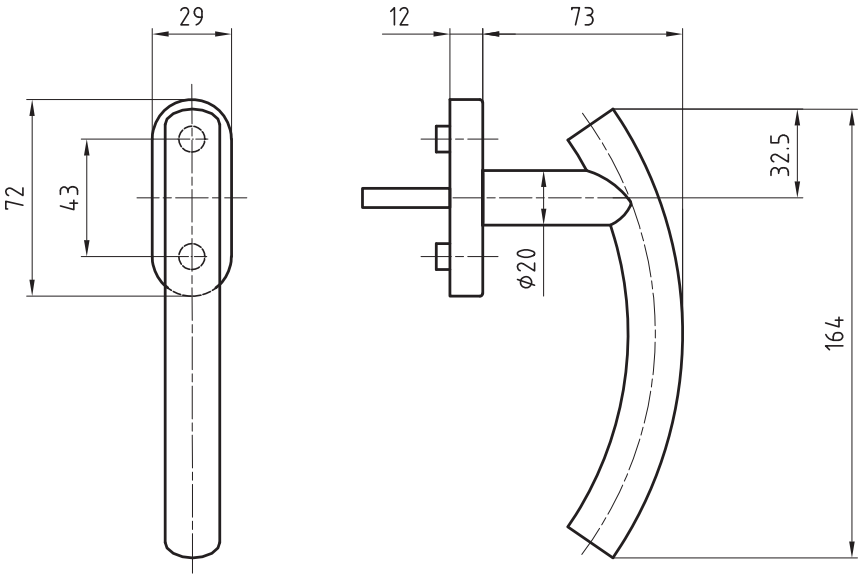

5050
Stainless steel lever handle
p.29

5051
Stainless steel lever handle
p.30

8500
Stainless steel window drive
p.241

8.1 Window handles

Stainless steel window handle
5052/5616 CF Biel

Product profile
Commercial buildings, administrative centres and superior quality residential developments

Standard version
- Window handle 133 mm, ø 20 mm
- Satin stainless steel
- 4 x 90° ball stop
- Left/right applicable
- Square spindle 7x32mm
- Clip on rose 5616 CF
- 72x29x12 mm
- Projection 72 mm
- Fixing centres 43 mm
- Studs ø 9,5/12 mm
- Suitable for all tilt and turn systems

Options
- Length of square spindle 7x24, 26, 35, 40, 114 (other spindle lengths upon request)
- Polished stainless steel
- RAL lacquered
- Also available as a pair

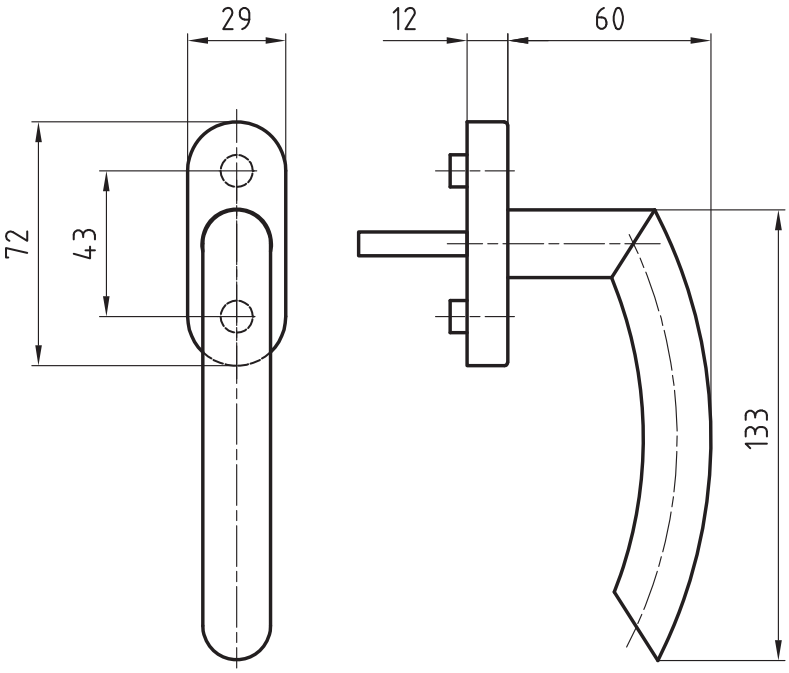

5052
Stainless steel lever handle
p.31

8500
Stainless steel window drive
p.241

5617 A
Stainless steel window handle
p.230

8.1 Window handles

Stainless steel window handle
5054/5616 CF Uppsala

Product profile
Hospitals, commercial buildings, administrative centres

Standard version
- Window handle 138 mm, ø 20 mm
- Satin stainless steel
- 4 x 90° ball stop
- Left/right applicable
- Square spindle 7x32mm
- Clip on rose 5616 CF
- 72x29x12 mm
- Projection 87 mm
- Fixing centres 43 mm
- Studs ø 9,5/12 mm
- Suitable for all tilt and turn systems

Options
- Length of square spindle 7x24, 26, 35, 40, 114 (other spindle lengths upon request)
- Polished stainless steel
- RAL lacquered
- Also available as a pair

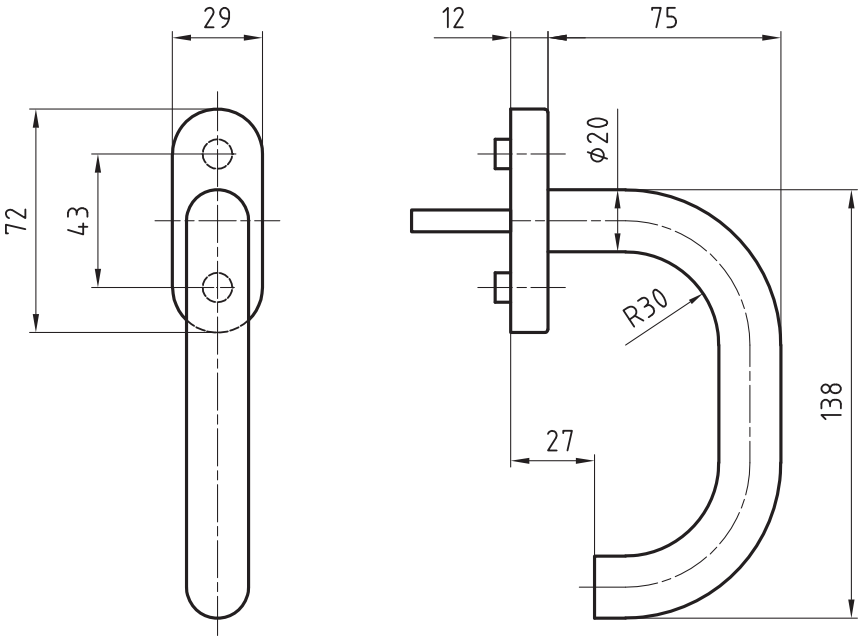

5054
Stainless steel lever handle
p.33

8500
Stainless steel window drive
p.241

5155-280/5613
Stainless steel handle PSK + HST
p.238

5155-280/5619K
Stainless steel handle PSK + HST
p.239

5617 A
Stainless steel window handle
p.230

8.1 Window handles

Stainless steel window handle
5056/5616 CF Berlin

Product profile
Commercial buildings, administrative centres and superior quality residential developments

Standard version
- Window handle 125 mm
- Solid satin stainless steel
- 4 x 90° ball stop
- Left/right applicable
- Square spindle 7x32mm
- Clip on rose 5616 CF
- 72x29x12 mm
- Projection 59 mm
- Fixing centres 43 mm
- Studs ø 9,5/12 mm
- Suitable for all tilt and turn systems

Options
- Length of square spindle 7x24, 26, 35, 40, 114 (other spindle lengths upon request)
- Polished stainless steel
- RAL lacquered
- Also available as a pair

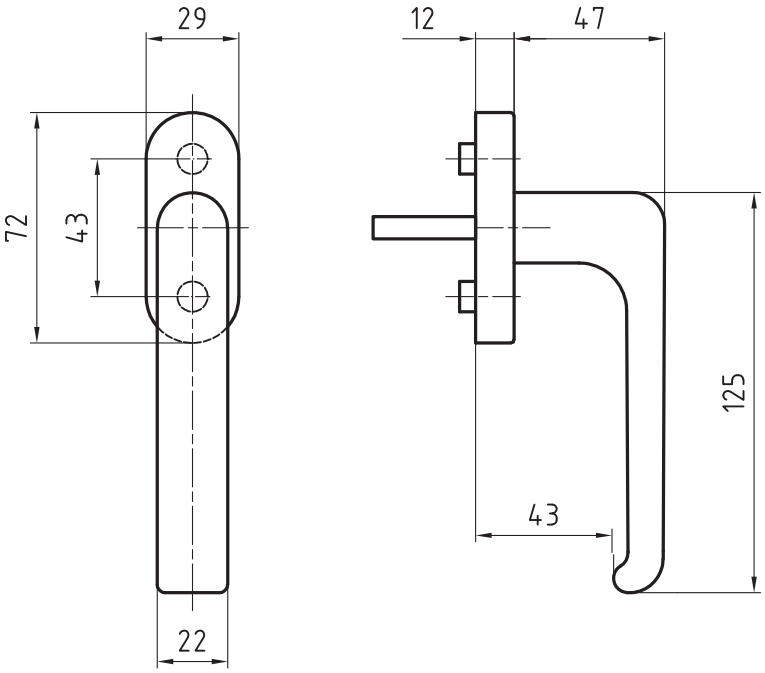

5056
Stainless steel lever handle
p.35

8500
Stainless steel window drive
p.241

5617 A
Stainless steel window handle
p.230

8.1 Window handles

Stainless steel window handle
5057/5616 CF Thun

Product profile
Commercial buildings, administrative centres and superior quality residential developments

Standard version
- Window handle 135 mm, ø 20 mm
- Satin stainless steel
- 4 x 90° ball stop
- Left/right applicable
- Square spindle 7x32mm
- Clip on rose 5616 CF
- 72x29x12 mm
- Projection 73 mm
- Fixing centres 43 mm
- Studs ø 9,5/12 mm
- Suitable for all tilt and turn systems

Options
- Length of square spindle 7x24, 26, 35, 40, 114 (other spindle lengths upon request)
- Polished stainless steel
- RAL lacquered
- Also available as a pair

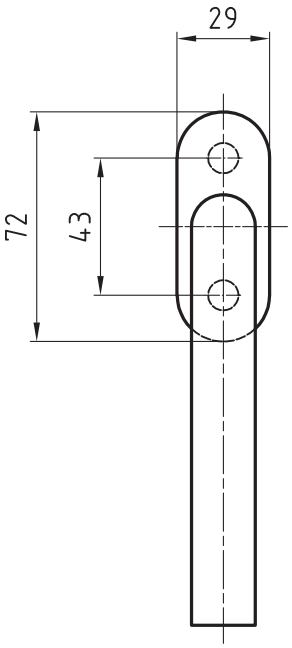

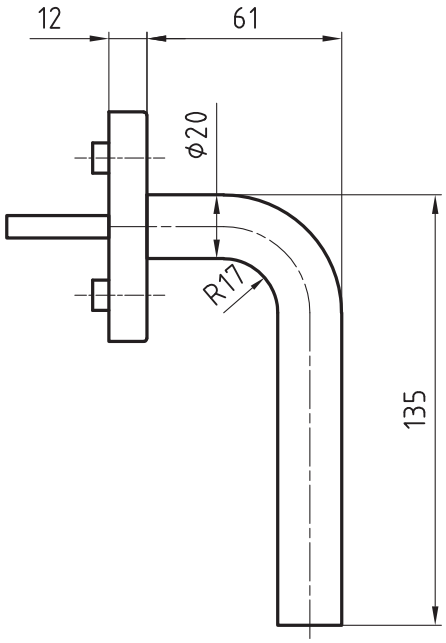

5057
Stainless steel lever handle
p.36

8500
Stainless steel window drive
p.241

5057-280/5613
Stainless steel handle PSK + HST
p.234

5057-280/5619K
Stainless steel handle PSK + HST
p.235

5617 A
Stainless steel window handle
p.230

8.1 Window handles

Stainless steel window handle
5060/5616 CF Zug

Product profile
Commercial buildings, administrative centres and superior quality residential developments

Standard version
- Window handle 124 mm
- Solid satin stainless steel
- 4 x 90° ball stop
- Left/right applicable
- Square spindle 7x32mm
- Clip on rose 5616 CF
- 72x29x12 mm
- Projection 71 mm
- Fixing centres 43 mm
- Studs ø 9,5/12 mm
- Suitable for all tilt and turn systems

Options
- Length of square spindle 7x24, 26, 35, 40, 114 (other spindle lengths upon request)
- Polished stainless steel
- RAL lacquered
- Also available as a pair

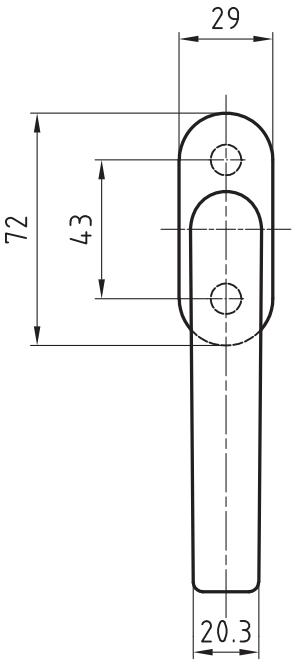

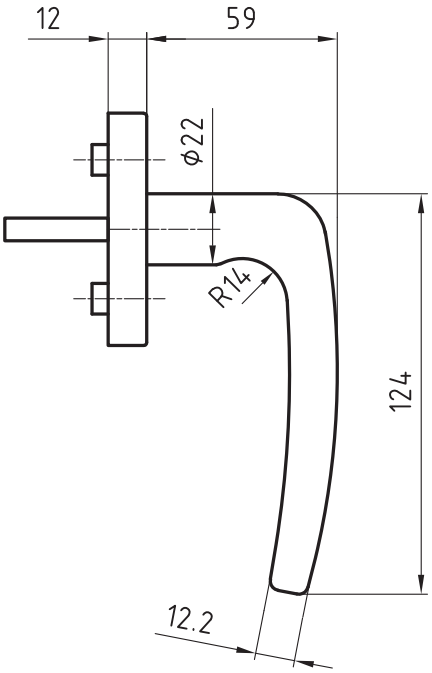

5060
Stainless steel lever handle
p.37

8500
Stainless steel window drive
p.241

5617 A
Stainless steel window handle
p.230

8.1 Window handles

Stainless steel window handle
5061/5616 CF Jackson

Product profile
Commercial buildings, administrative centres and superior quality residential developments

Standard version
- Window handle 130 mm, ø 18
- Satin stainless steel
- 4 x 90° ball stop
- Left/right applicable
- Square spindle 7x32mm
- Clip on rose 5616 CF
- 72x29x12 mm
- Projection 77 mm
- Fixing centres 43 mm
- Studs ø 9,5/12 mm
- Suitable for all tilt and turn systems

Options
- Length of square spindle 7x24, 26, 35, 40, 114 (other spindle lengths upon request)
- Polished stainless steel
- RAL lacquered
- Also available as a pair

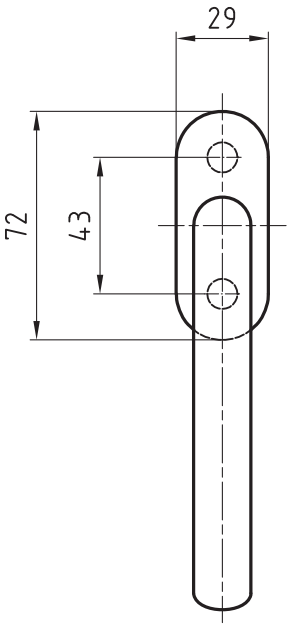

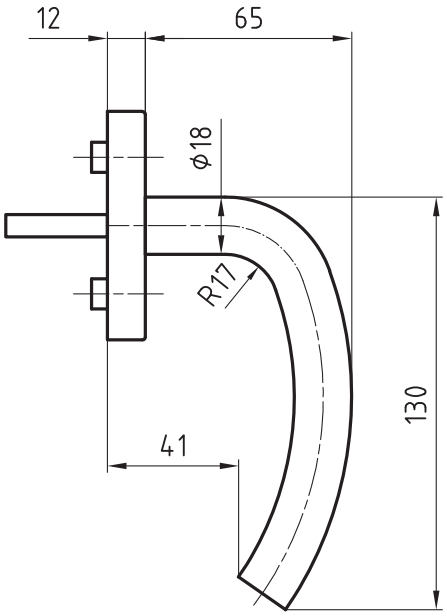

5061
Stainless steel lever handle
p.38

5062
Stainless steel lever handle
p.39

8500
Stainless steel window drive
p.241

5617 A
Stainless steel window handle
p.230

8.1 Window handles

Stainless steel window handle
5062/5616 CF New Orleans

Product profile
Commercial buildings, administrative centres and superior quality residential developments

Standard version
- Window handle 145 mm, ø 20 mm
- Satin stainless steel
- 4 x 90° ball stop
- Left/right applicable
- Square spindle 7x32mm
- Clip on rose 5616 CF
- 72x29x12 mm
- Projection 84 mm
- Fixing centres 43 mm
- Studs ø 9,5/12 mm
- Suitable for all tilt and turn systems

Options
- Length of square spindle 7x24, 26, 35, 40, 114 (other spindle lengths upon request)
- Polished stainless steel
- RAL lacquered
- Also available as a pair

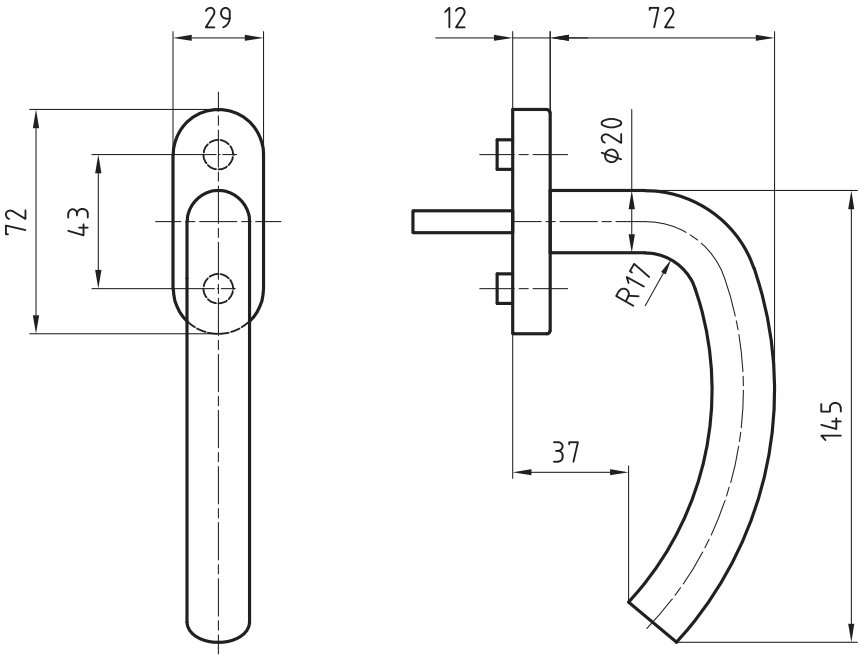

5062
Stainless steel lever handle
p.39

5162
Stainless steel lever handle
p.64

5061/5616 CF
Stainless steel window handle
p.209

8500
Stainless steel window drive
p.241

5617 A
Stainless steel window handle
p.230

8.1 Window handles

Stainless steel window handle
5064A/5616 CF Oslo

Product profile
Hospitals, commercial buildings, administrative centres

Standard version
- Window handle 138 mm, ø 20 mm
- Satin stainless steel
- 4 x 90° ball stop
- Left/right applicable
- Square spindle 7x32mm
- Clip on rose 5616 CF
- 72x29x12 mm
- Projection 73 mm
- Fixing centres 43 mm
- Studs ø 9,5/12 mm
- Suitable for all tilt and turn systems

Options
- Length of square spindle 7x24, 26, 35, 40, 114 (other spindle lengths upon request)
- Polished stainless steel
- RAL lacquered
- Also available as a pair

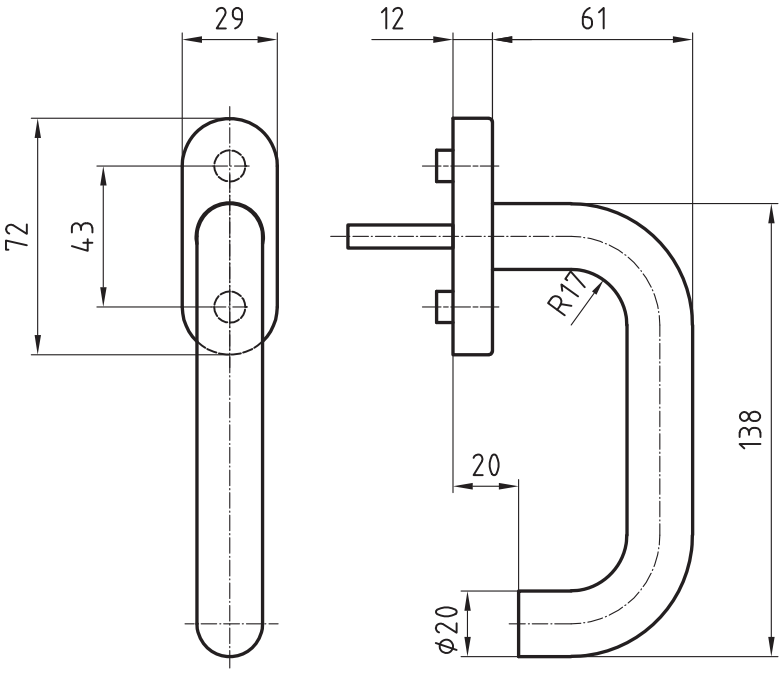

5064
Stainless steel lever handle
p.40

8500
Stainless steel window drive
p.241

5155-280/5613
Stainless steel handle PSK + HST
p.238

5155-280/5619K
Stainless steel handle PSK + HST
p.239

5617 A
Stainless steel window handle
p.230

8.1 Window handles

Stainless steel window handle
5068/5616 CF Garbsen

Product profile
Residential construction

Standard version
- Window handle 133 mm, ø 18 mm
- Satin stainless steel
- 4 x 90° ball stop
- Left/right applicable
- Square spindle 7x32mm
- Clip on rose 5616 CF
- 72x29x12 mm
- Projection 69 mm
- Fixing centres 43 mm
- Studs ø 9,5/12 mm
- Suitable for all tilt and turn systems

Options
- Length of square spindle 7x24, 26, 35, 40, 114 (other spindle lengths upon request)
- Polished stainless steel
- RAL lacquered
- Also available as a pair

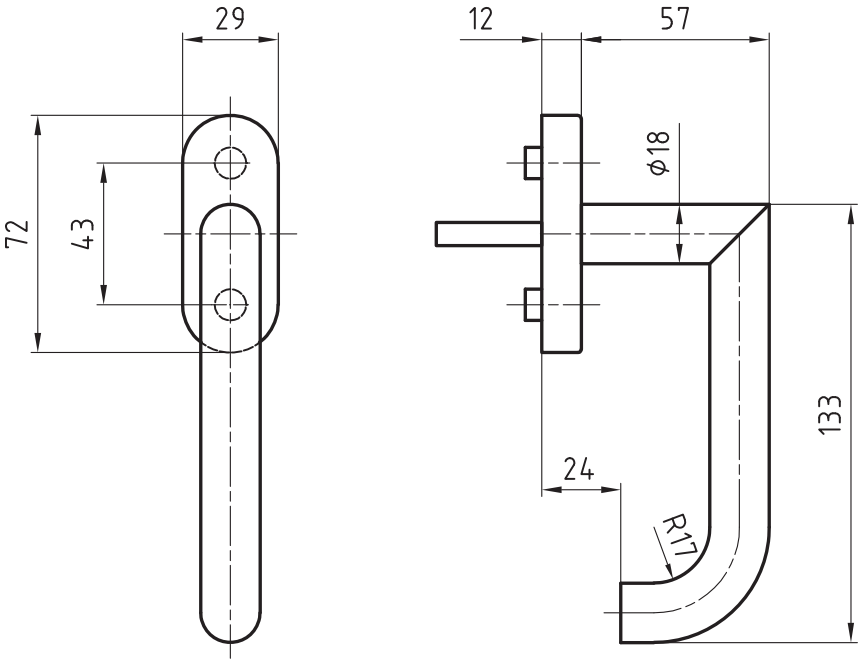

5068
Stainless steel lever handle
p.43

5069
Stainless steel lever handle
p.44

8500
Stainless steel window drive
p.241

5617 A
Stainless steel window handle
p.230

8.1 Window handles

Stainless steel window handle
5069/5616 CF Hannover

Product profile
Commercial buildings, administrative centres and superior quality residential developments

Standard version
- Window handle 138 mm, ø 20 mm
- Satin stainless steel
- 4 x 90° ball stop
- Left/right applicable
- Square spindle 7x32mm
- Clip on rose 5616 CF
- 72x29x12 mm
- Projection 72 mm
- Fixing centres 43 mm
- Studs ø 9,5/12 mm
- Suitable for all tilt and turn systems

Options
- Length of square spindle 7x24, 26, 35, 40, 114 (other spindle lengths upon request)
- Polished stainless steel
- RAL lacquered
- Also available as a pair

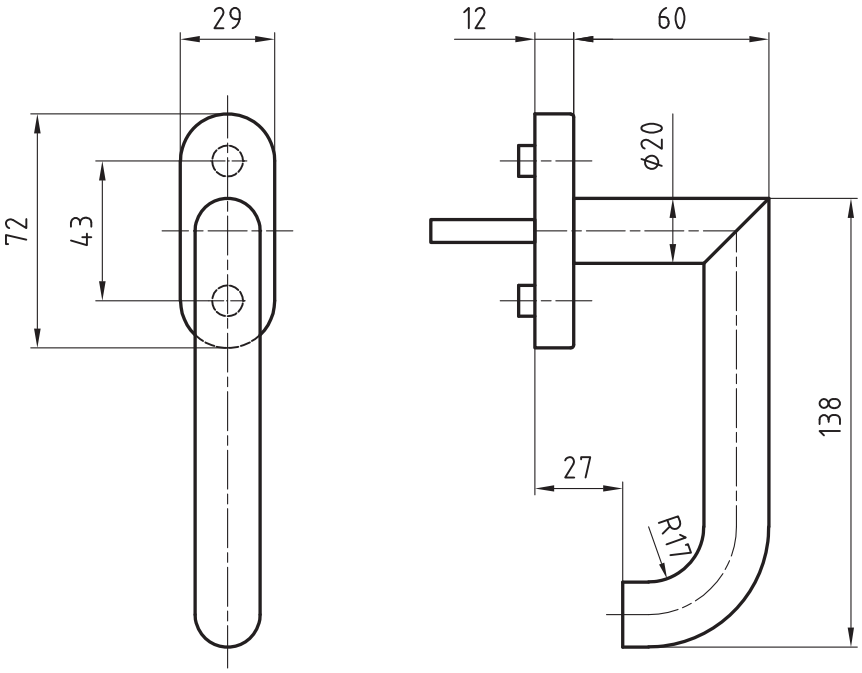

5069
Stainless steel lever handle
p.44

5068
Stainless steel lever handle
p.43

8500
Stainless steel window drive
p.241

5617 A
Stainless steel window handle
p.230

8.1 Window handles

Stainless steel window handle
5070/5616 CF Berne

Product profile
Residential construction

Standard version
- Window handle 120 mm, ø 18 mm
- Satin stainless steel
- 4 x 90° ball stop
- Left/right applicable
- Square spindle 7x32mm
- Clip on rose 5616 CF
- 72x29x12 mm
- Projection 69 mm
- Fixing centres 43 mm
- Studs ø 9,5/12 mm
- Suitable for all tilt and turn systems

Options
- Length of square spindle 7x24, 26, 35, 40, 114 (other spindle lengths upon request)
- Polished stainless steel
- RAL lacquered
- Also available as a pair

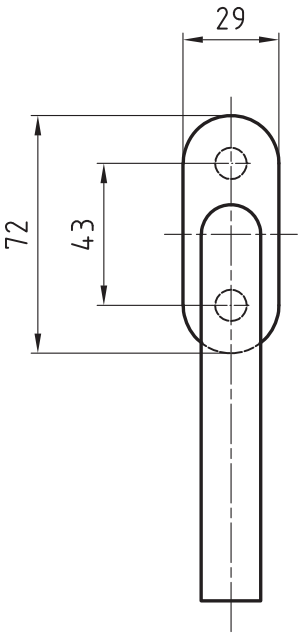

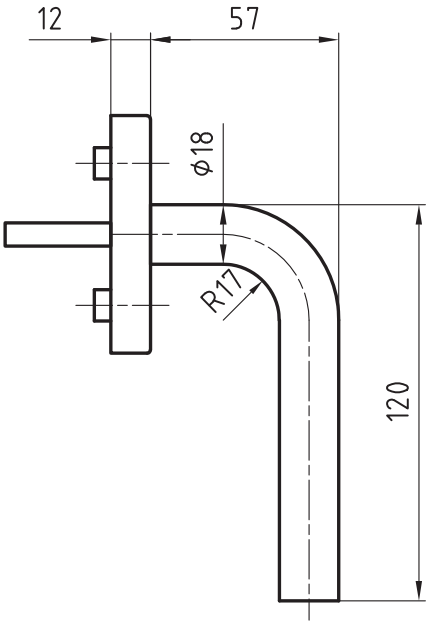

5070
Stainless steel lever handle
p.45

5057/5616 CF
Stainless steel window handle
p.207

5057-280/5619K
Stainless steel handle PSK + HST
p.235

8500
Stainless steel window drive
p.241

5617 A
Stainless steel window handle
p.230

8.1 Window handles

Stainless steel window handle
5071/5616 CF Memphis

Product profile
Commercial buildings, administrative centres and superior quality residential developments

Standard version
- Window handle 130 mm, ø 20 mm
- Satin stainless steel
- 4 x 90° ball stop
- Left/right applicable
- Square spindle 7x32mm
- Clip on rose 5616 CF
- 72x29x12 mm
- Projection 67 mm
- Fixing centres 43 mm
- Studs ø 9,5/12 mm
- Suitable for all tilt and turn systems

Options
- Length of square spindle 7x24, 26, 35, 40, 114 (other spindle lengths upon request)
- Polished stainless steel
- RAL lacquered
- Also available as a pair

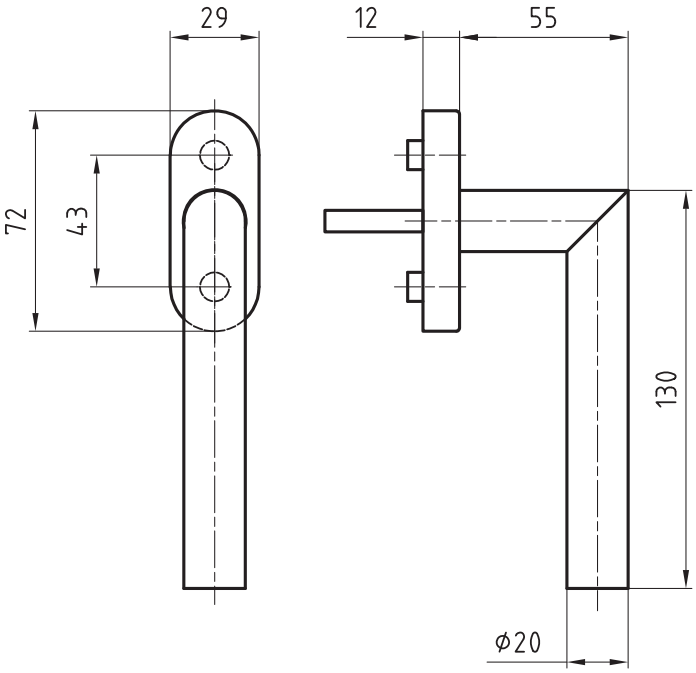

5071
Stainless steel lever handle
p.46

8500
Stainless steel window drive
p.241

5071-280/5613
Stainless steel handle PSK + HST
p.236

5071-280/5619K
Stainless steel handle PSK + HST
p.237

5617 A
Stainless steel window handle
p.230

8.1 Window handles

Stainless steel window handle
5073/5616 CF Banks

Product profile
Residential construction

Standard version
- Window handle 110 mm, ø 18 mm
- Satin stainless steel
- 4 x 90° ball stop
- Left/right applicable
- Square spindle 7x32mm
- Clip on rose 5616 CF
- 72x29x12 mm
- Projection 62 mm
- Fixing centres 43 mm
- Studs ø 9,5/12 mm
- Suitable for all tilt and turn systems

Options
- Length of square spindle 7x24, 26, 35, 40, 114 (other spindle lengths upon request)
- Polished stainless steel
- RAL lacquered
- Also available as a pair

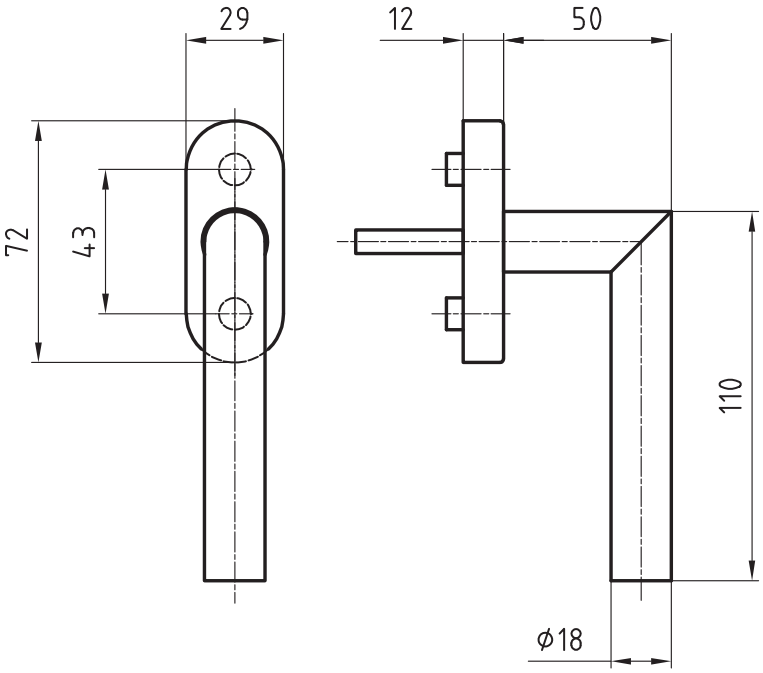

5073
Stainless steel lever handle
p.47

8500
Stainless steel window drive
p.241

5617 A
Stainless steel window handle
p.230

8.1 Window handles

Stainless steel window handle
5083/5616 CF Tulln

Product profile
Commercial buildings, administrative centres and superior quality residential developments

Standard version
- Window handle 145 mm, ø 20 mm
- Satin stainless steel
- 4 x 90° ball stop
- Left/right applicable
- Square spindle 7x32mm
- Clip on rose 5616 CF
- 72x29x12 mm
- Projection 75 mm
- Fixing centres 43 mm
- Studs ø 9,5/12 mm
- Suitable for all tilt and turn systems

Options
- Length of square spindle 7x24, 26, 35, 40, 114 (other spindle lengths upon request)
- Polished stainless steel
- RAL lacquered
- Also available as a pair

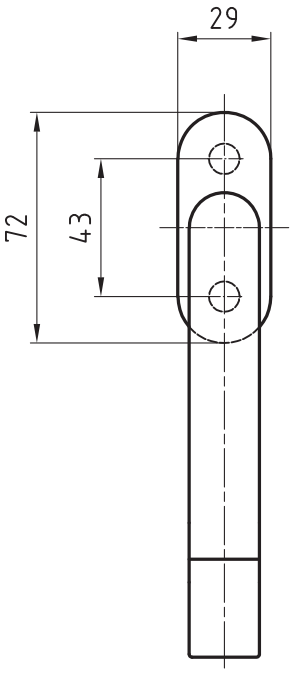

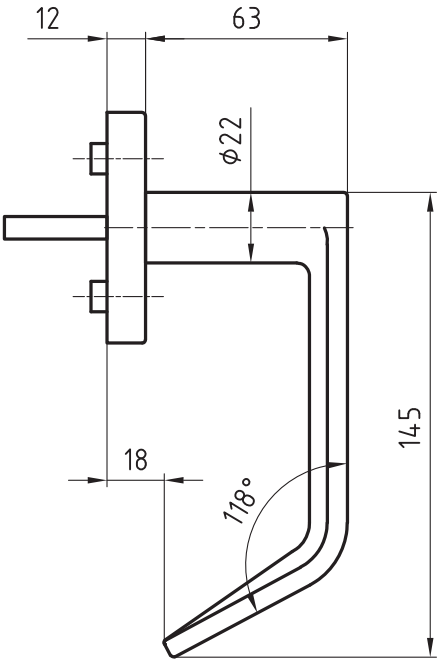

5083
Stainless steel lever handle
p.50

8500
Stainless steel window drive
p.241

5617 A
Stainless steel window handle
p.230

8.1 Window handles

Stainless steel window handle
5085/5616 CF Sapphire

Product profile
The new concept Sapphire i-Design line decidedly convinces by its first class finish, simply a special design.

Standard version
- Window handle 165 mm
- Solid satin stainless steel
- 4 x 90° ball stop
- Square spindle 7x32mm
- Clip on rose 5616 CF
- Projection 42 mm
- Fixing centres 43 mm
- Studs ø 9,5/12 mm
- Suitable for all tilt and turn systems

Options
- Length of square spindle 7x24, 26, 35, 40, 114 (other spindle lengths upon request)
- Polished stainless steel
- RAL lacquered
- Also available as a pair

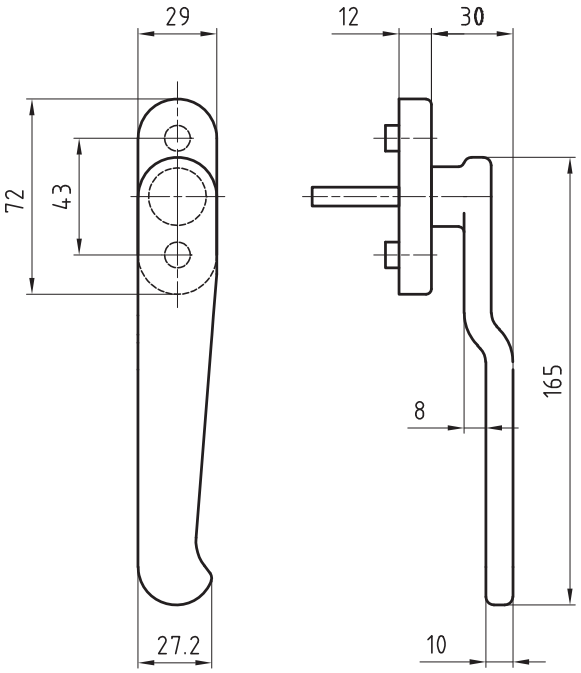

5080
Stainless steel lever handle
p.49

5390C
Stainless steel short plate to clips
p.117

5835
Stainless steel door knob
p.76

8.1 Window handles

Stainless steel window handle
5087/5616 CF INOX Basle

Product profile
The classic one - new and nobler more than ever - Shoulder in solid stainless steel

Standard version
- Window handle 125 mm
- Solid satin stainless steel shoulder
- Satin stainless steel tube
- 4 x 90° ball stop
- Left/right applicable
- Square spindle 7x32mm
- Clip on rose 5616 CF
- 72x29x12 mm
- Projection 68 mm
- Fixing centres 43 mm
- Studs ø 9,5/12 mm
- Suitable for all tilt and turn systems

Options
- Length of square spindle 7x24, 26, 35, 40, 114 (other spindle lengths upon request)
- Also available as a pair
- Polished stainless steel shoulder
- Tubes available in:
- Polished stainless steel
- Stainless steel PVD-coated, brass coloured
- Stainless steel RAL-coated, in acc. with colour chart

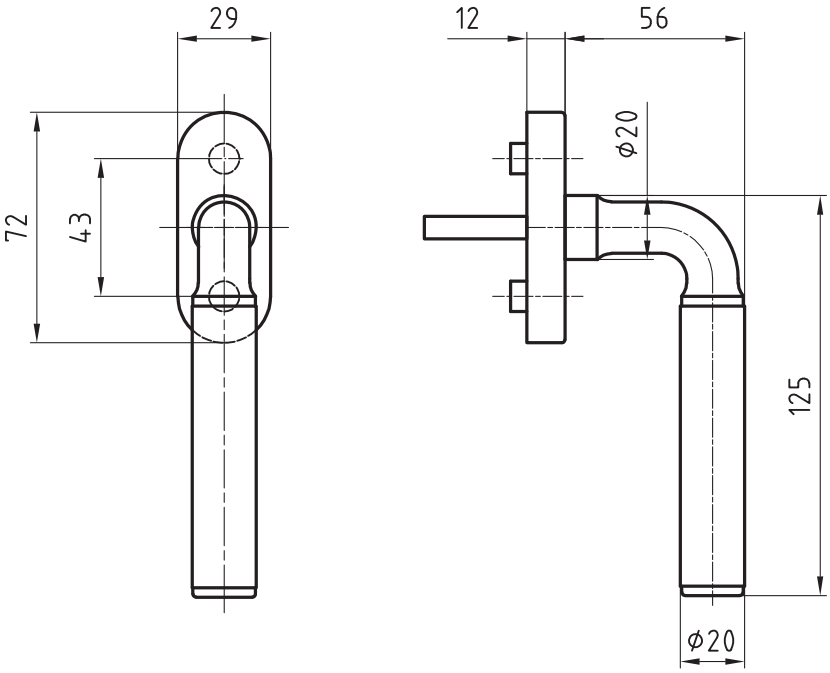

5087
Stainless steel lever handle
p.52

5287
Stainless steel lever handle
p.65

8500
Stainless steel window drive
p.241

5617 A
Stainless steel window handle
p.230

8.1 Window handles

Stainless steel window handle
5088/5616 CF Zurich

Product profile
Banks, commercial buildings, administrative centres

Standard version
- Window handle 130 mm, ø 22 mm
- Solid satin stainless steel
- 4 x 90° ball stop
- Left/right applicable
- Square spindle 7x32mm
- Clip on rose 5616 CF
- 72x29x12 mm
- Projection 67 mm
- Fixing centres 43 mm
- Suitable for all tilt and turn systems

Options
- Length of square spindle 7x24, 26, 35, 40, 114 (other spindle lengths upon request)
- Polished stainless steel
- RAL lacquered
- Also available as a pair

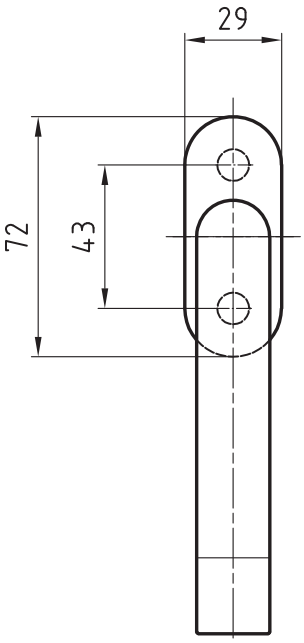

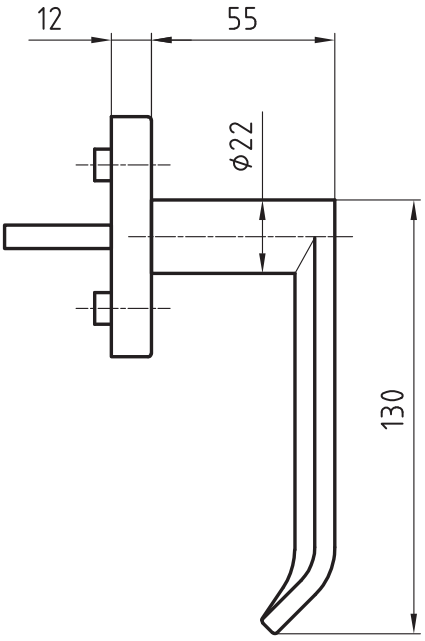

5088
Stainless steel lever handle
p.53

5089
Stainless steel metal frame lever handle
p.149

5089/5616 CF
Stainless steel window handle
p.221

8500
Stainless steel window drive
p.241

5617 A
Stainless steel window handle
p.230

Stainless steel window handle
5089/5616 CF Assoluto

Product profile
Banks, commercial buildings, administrative centres

Standard version
- Window handle 153 mm, ø 22 mm
- Solid satin stainless steel
- 4 x 90° ball stop
- Left/right applicable
- Square spindle 7x32mm
- Clip on rose 5616 CF
- 72x29x12 mm
- Projection 69 mm
- Fixing centres 43 mm
- Studs ø 9,5/12 mm
- Suitable for all tilt and turn systems

Options
- Length of square spindle 7x24, 26, 35, 40, 114 (other spindle lengths upon request)
- Polished stainless steel
- RAL lacquered
- Also available as a pair

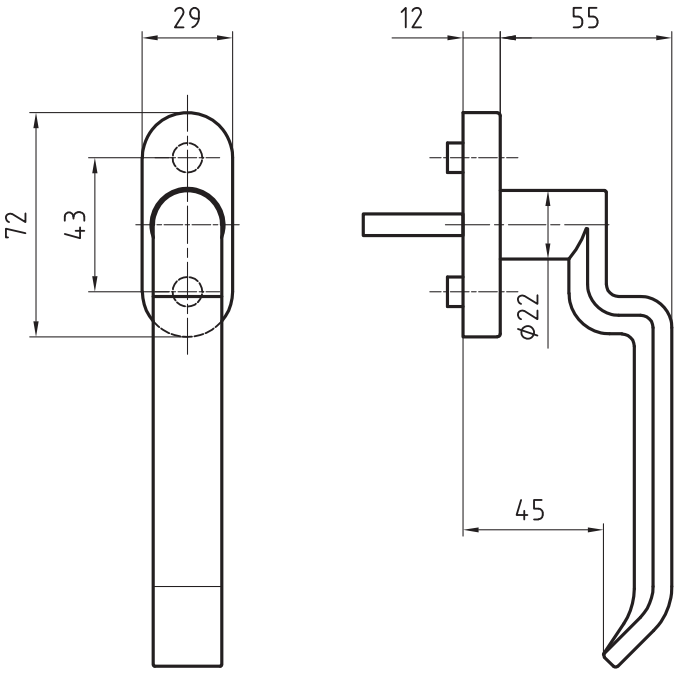

5089
Stainless steel metal frame lever handle
p.149

5088
Stainless steel lever handle
p.53

5088/5616 CF
Stainless steel window handle
p.220

8500
Stainless steel window drive
p.241

5617 A
Stainless steel window handle
p.230

8.1 Window handles

Stainless steel window handle
5091/5616 CF Emerald

Product profile
Commercial buildings, administrative centres and superior quality residential developments

Standard version
- Window handle 134 mm
- Solid satin stainless steel
- 4 x 90° ball stop
- Left/right applicable
- Square spindle 7x32mm
- Clip on rose 5616 CF
- 72x29x12 mm
- Projection 80 mm
- Fixing centres 43 mm
- Studs ø 9,5/12 mm
- Suitable for all tilt and turn systems

Options
- Length of square spindle 7x24, 26, 35, 40, 114 (other spindle lengths upon request)
- Polished stainless steel
- RAL lacquered
- Also available as a pair

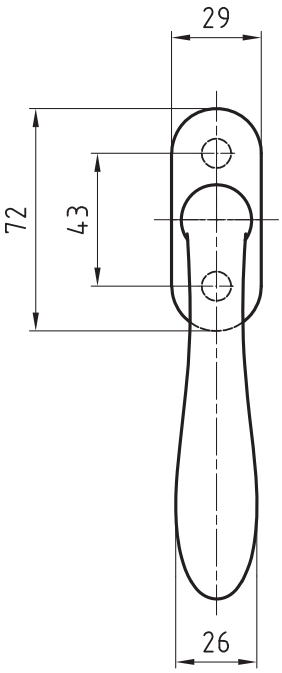

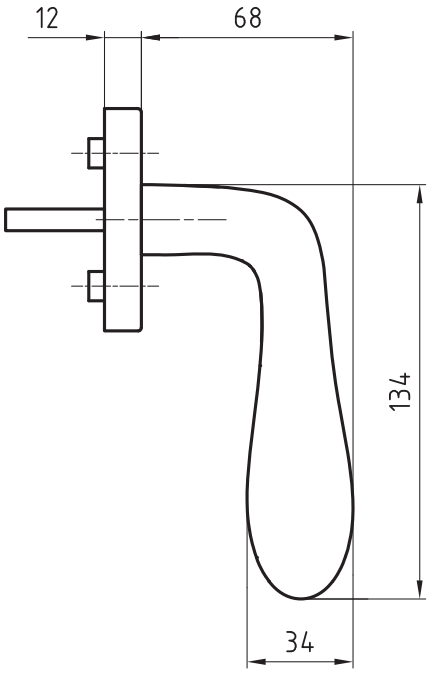

5090
Stainless steel lever handle
p.54

8500
Stainless steel window drive
p.241

5617 A
Stainless steel window handle
p.230

8.1 Window handles

Stainless steel window handle
5092/5616 CF München

Product profile
Commercial buildings, administrative centres and superior quality residential developments

Standard version
- Window handle 131 mm, ø 20 mm
- Satin stainless steel
- 4 x 90° ball stop
- Left/right applicable
- Square spindle 7x32mm
- Clip on rose 5616 CF
- 72x29x12 mm
- Projection 68 mm
- Fixing centres 43 mm
- Studs ø 9,5/12 mm
- Suitable for all tilt and turn systems

Options
- Length of square spindle 7x24, 26, 35, 40, 114 (other spindle lengths upon request)
- Polished stainless steel
- RAL lacquered
- Also available as a pair

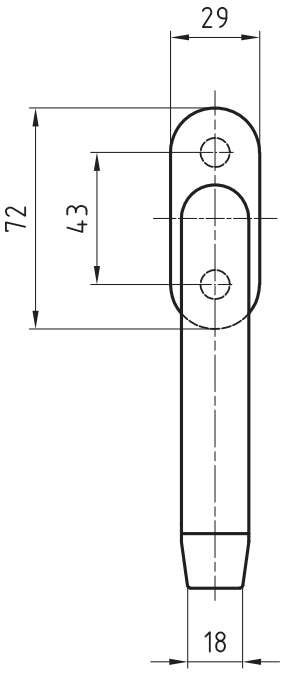

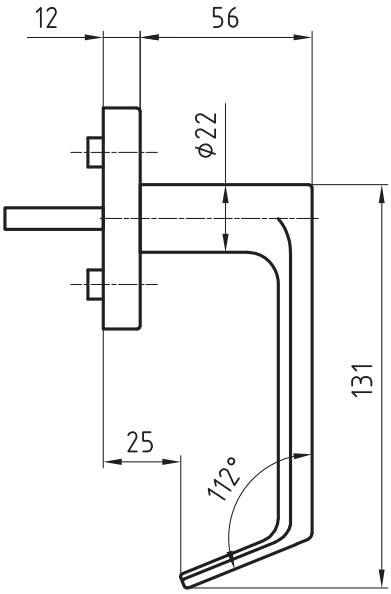

5092
Stainless steel lever handle
p.55

8500
Stainless steel window drive
p.241

5617 A
Stainless steel window handle
p.230

8.1 Window handles

Stainless steel window handle
5093/5616 CF George

Product profile
Residential construction

Standard version
- Window handle 110 mm, ø 18 mm
- Satin stainless steel
- 4 x 90° ball stop
- Left/right applicable
- Square spindle 7x32mm
- Clip on rose 5616 CF
- 72x29x12 mm
- Projection 67 mm
- Fixing centres 43 mm
- Studs ø 9,5/12 mm
- Suitable for all tilt and turn systems

Options
- Length of square spindle 7x24, 26, 35, 40, 114 (other spindle lengths upon request)
- Polished stainless steel
- RAL lacquered
- Also available as a pair

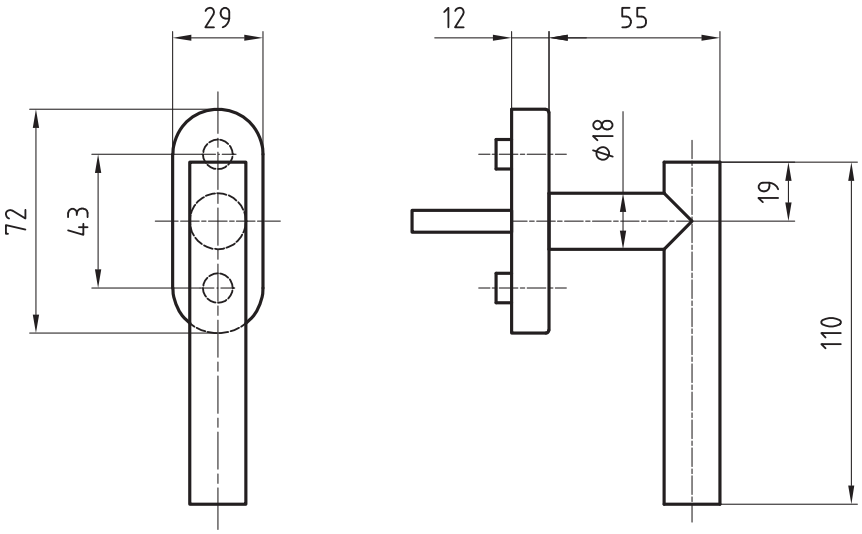

5093
Stainless steel lever handle
p.56

5094
Stainless steel lever handle
p.57

8500
Stainless steel window drive
p.241

Stainless steel window handle

5094/5616 CF Cape Town

Product profile
Commercial buildings, administrative centres and superior quality residential developments

Standard version
- Window handle 130 mm, ø 20 mm
- Satin stainless steel
- 4 x 90° ball stop
- Left/right applicable
- Square spindle 7x32mm
- Clip on rose 5616 CF
- 72x29x12 mm
- Projection 72 mm
- Fixing centres 43 mm
- Studs ø 9,5/12 mm
- Suitable for all tilt and turn systems

Options
- Length of square spindle 7x24, 26, 35, 40, 114 (other spindle lengths upon request)
- Polished stainless steel
- RAL lacquered
- Also available as a pair

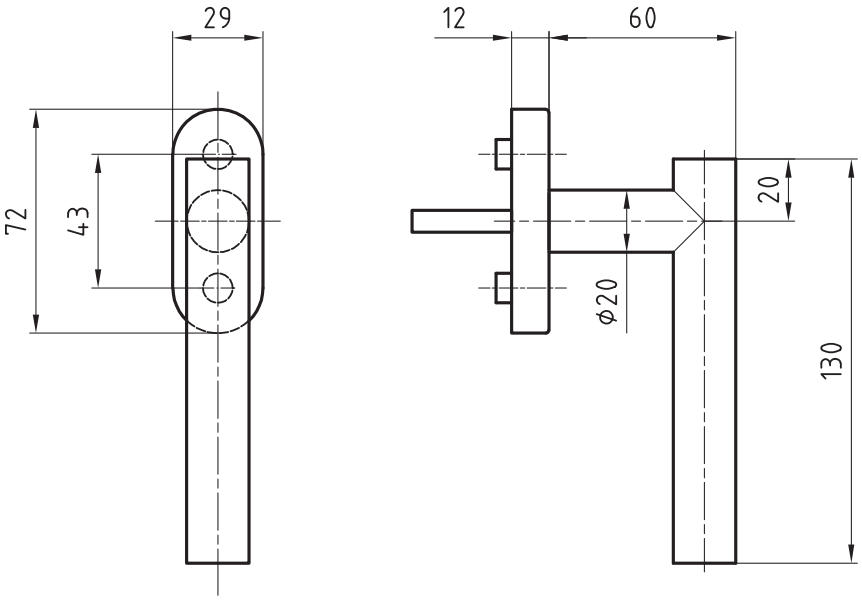

5094
Stainless steel lever handle
p.57

5093
Stainless steel lever handle
p.56

8500
Stainless steel window drive
p.241

8.1 Window handles

Stainless steel window handle
5099/5616 CF Helsinki

Product profile
Residential construction

Standard version
- Window handle 133 mm, ø 18 mm
- Satin stainless steel
- 4 x 90° ball stop
- Left/right applicable
- Square spindle 7x32mm
- Clip on rose 5616 CF
- 72x29x12 mm
- Projection 69 mm
- Fixing centres 43 mm
- Studs ø 9,5/12 mm
- Suitable for all tilt and turn systems

Options
- Length of square spindle 7x24, 26, 35, 40, 114 (other spindle lengths upon request)
- Polished stainless steel
- RAL lacquered
- Also available as a pair

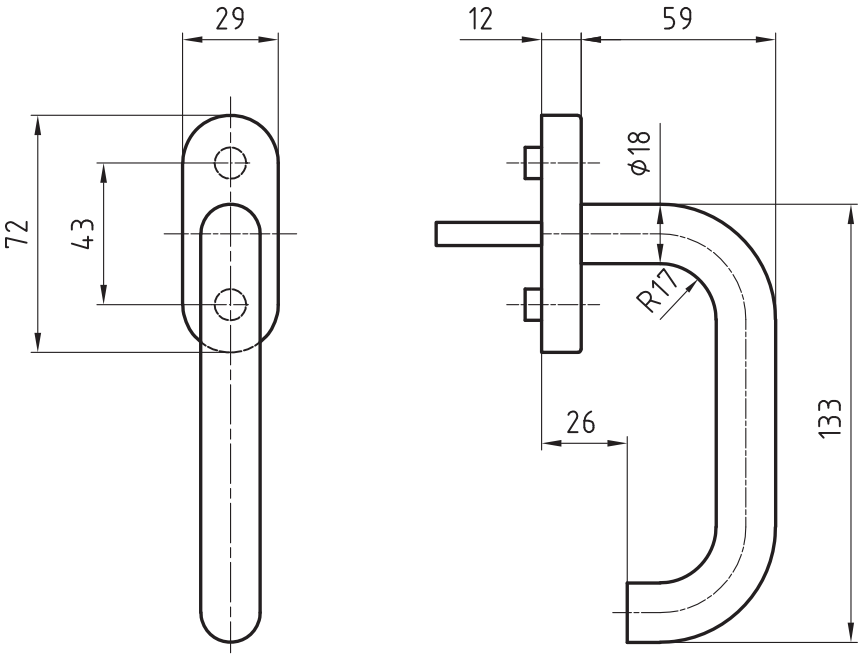

5099
Stainless steel lever handle
p.60

5064
Stainless steel lever handle
p.40

8500
Stainless steel window drive
p.241

5617 A
Stainless steel window handle
p.230

Stainless steel window turn
5715/5616 CF

Standard version
- Window turn, ø 18 mm
- Satin stainless steel
- 4 x 90° ball stop
- Left/right applicable
- Square spindle 7x32mm
- Clip on rose 5616 CF
- 72x29x12 mm
- Projection 65 mm
- Fixing centres 43 mm
- Studs ø 9,5/12 mm
- Suitable for all tilt and turn systems

Options
- Length of square spindle 7x24, 26, 35, 40, 114 (other spindle lengths upon request)
- Polished stainless steel
- RAL lacquered
- Also available as a pair

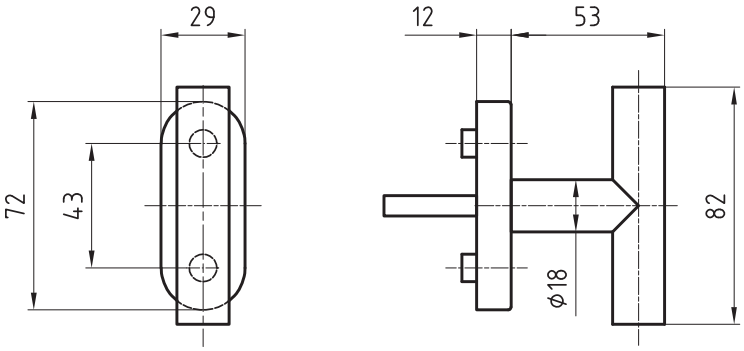

5715
Stainless steel turn
p.68

8500
Stainless steel window drive
p.241

8.2 Roses

Standard version
- Satin stainless steel
- Without cover
- Clip on rose
- Square spindle 7x32mm
- Fixing centres 43 mm

Options
- Length of square spindle 7x24, 26, 35, 40, 114 (other spindle lengths upon request)
- Polished stainless steel
- RAL lacquered
- PVD lacquered

Spindle rose
5616 DC

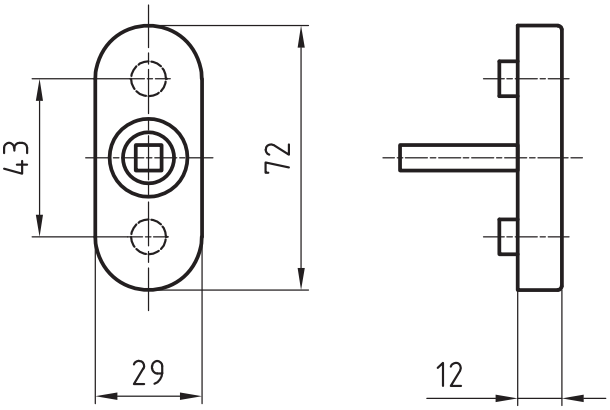

5616 DCV
Spindle rose
p.229

8.2 Roses

Standard version
- Satin stainless steel
- With cover
- Clip on rose
- Square spindle 7x32mm
- Fixing centres 43 mm

Options
- Length of square spindle 7x24, 26, 35, 40, 114 (other spindle lengths upon request)
- Polished stainless steel
- RAL lacquered
- PVD lacquered

Spindle rose
5616 DCV With cover

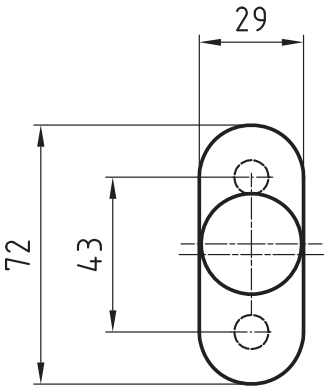

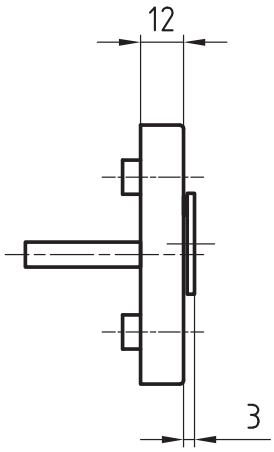

5616 DC
Spindle rose
p.228

8.2 Roses

Stainless steel window handle
5617 A Lockable

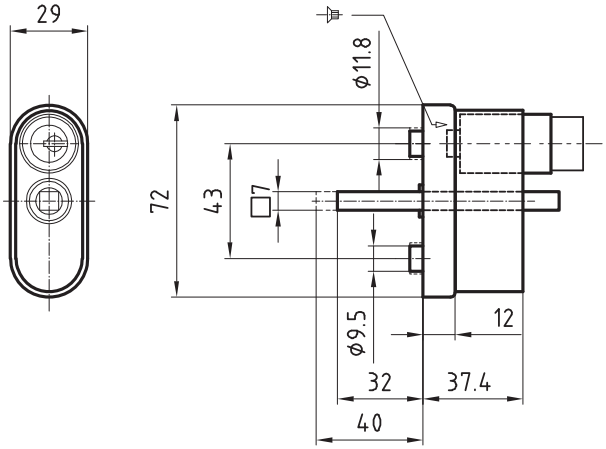

Product profile
As a locking security device for windows, this model offers effective protection against the unauthorised opening of windows and balcony doors. Suitable for locking systems. Can be combined with Glutz window handles. Used also as child protection.

Standard version
- Satin stainless steel
- 4 x 90° ball stop
- Square spindle 7x32mm
- Case 72x29x37,4 mm
- Fixing centres 43 mm
- Studs ø 9,5/12 mm
- Suitable for all tilt and turn systems
- 2 keys
- Same keying possible
- Prepared for assembling with female handle

Options
- Suitable for keying systems Kaba, Keso, Sea a.s.o.
- Length of square spindle 7x24, 26, 35, 40, 114 (other spindle lengths upon request)
- Polished stainless steel
- RAL lacquered
- 5617 DC spindle rose
- Keying assorted with max. 10 different keyings

Quality standard
Conforms to ENV 1627: 1999-04 for use in burglar-proof windows

5617 DC
Spindle rose
p.231

8.2 Roses

Spindle rose
5617 DC Lockable

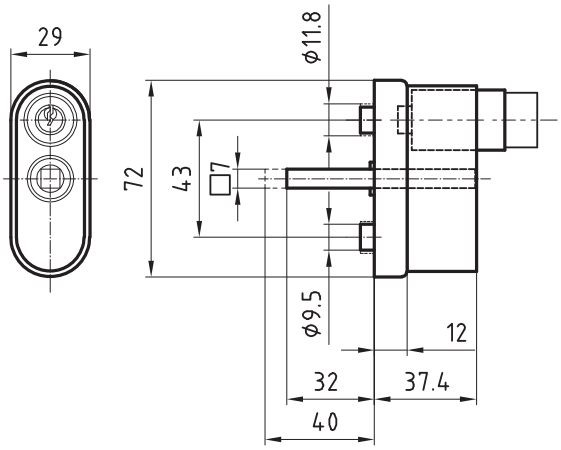

Product profile
As a locking security device for windows, this model offers effective protection against the unauthorised opening of windows and balcony doors. Suitable for locking systems. Can be combined with Glutz window handles. Used also as child protection.

Standard version
- Satin stainless steel
- 4 x 90° ball stop
- Square spindle 7x32mm
- Case 72x29x37,4 mm
- Fixing centres 43 mm
- Studs ø 9,5/12 mm
- Suitable for all tilt and turn systems
- 2 keys
- Same keying possible

Options
- Suitable for keying systems Kaba, Keso, Sea a.s.o.
- Length of square spindle 7x24, 26, 35, 40, 114 (other spindle lengths upon request)
- Polished stainless steel
- RAL lacquered
- Keying assorted with max. 10 different keyings

Quality standard
Conforms to ENV 1627: 1999-04 for use in burglar-proof windows

5617 A
Stainless steel window handle
p.230

8.3 Handles for balcony doors

Stainless steel handle PSK + HST
5032-280/5619K

Product profile
For parallel sliding doors with tilt system and normal sliding doors. The parallel sliding door can be slid parallel by the integrated ball stop when the handle is positioned sideward and the door can be moved in tilt position when the handle points upwards. Suitable for metal, wooden and plastic frame windows.

Standard version
- Handle 280 mm, ø 20 mm / ø 34 mm
- Solid satin stainless steel
- Square spindle 10 x 50 mm
- Projection 70 mm
- Rose
- Solid satin stainless steel
- 4 x 90° ball stop
- Size: 160 x 34 x 15 mm
- For fixing screws M5
- Fixing centres 80 mm

Options
- PZ 69 mm: 188 x 34 x 15 mm
- RZ 70 mm: 188 x 34 x 15 mm
- Square spindle 10 x 40 mm
- For fixing screws M6
- Polished stainless steel
- Other executions upon request

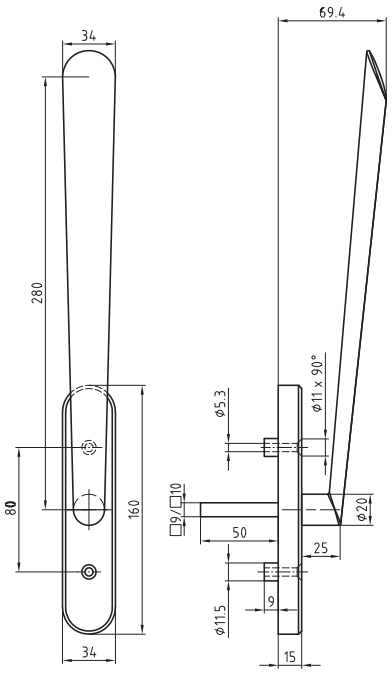

5030
Stainless steel lever handle
p.21

5033
Stainless steel lever handle
p.22

5130
Stainless steel lever handle
p.61

5031/5616 CF
Stainless steel window handle
p.196

5843
Stainless steel door knob
p.80

8.3 Handles for balcony doors

Stainless steel handle PSK + HST
5036-220/5619K

Product profile
For parallel sliding doors with tilt system and normal sliding doors. The parallel sliding door can be slid parallel by the integrated ball stop when the handle is positioned sideward and the door can be moved in tilt position when the handle points upwards. Suitable for metal, wooden and plastic frame windows.

Standard version
- Handle 220 mm, ø 20 mm
- Solid satin stainless steel
- Square spindle 10 x 50 mm
- Projection 74 mm
- **Plate:**
- Size: 160 x 34 x 15 mm
- For fixing screws M5
- Fixing centres 80 mm

Options
- PZ 69 mm: 188 x 34 x 15 mm
- RZ 70 mm: 188 x 34 x 15 mm
- Square spindle 10 x 40 mm
- For fixing screws M6
- Polished stainless steel
- Other executions upon request

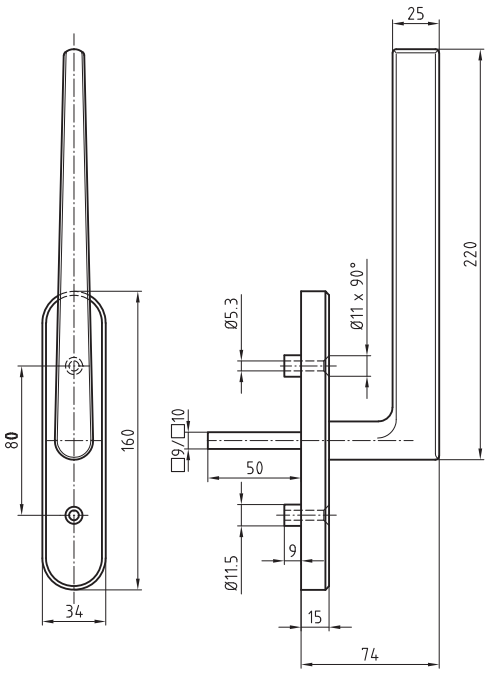

5036
Stainless steel lever handle
p.23

5036/5616 CF
Stainless steel window handle
p.197

8.3 Handles for balcony doors

Stainless steel handle PSK + HST
5057-280/5613

Product profile
For sliding-doors

Standard version
- Handle 280 mm, ø 20 mm
- Satin stainless steel
- Square spindle 10 x 50 mm
- Projection 66 mm
- **Plate:**
- Size: 160 x 34 x 2 mm
- For fixing screws M5
- Fixing centres 80 mm

Options
- PZ 69 mm: 188 x 34 x 2 mm
- RZ 70 mm: 188 x 34 x 2 mm
- Square spindle 10 x 40 mm
- For fixing screws M6
- Polished stainless steel
- Other executions upon request

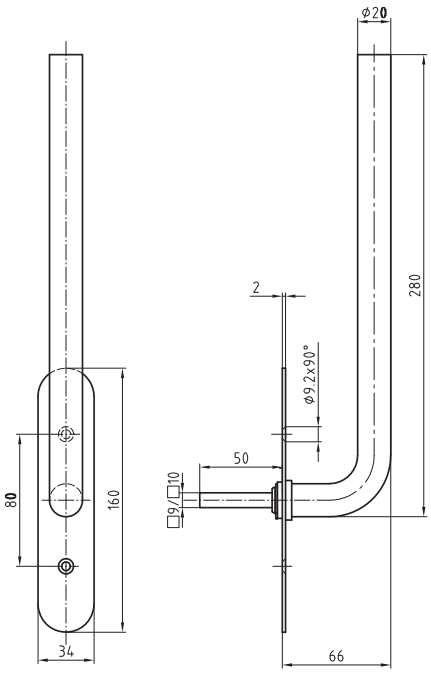

5057
Stainless steel lever handle
p.36

5070
Stainless steel lever handle
p.45

5057/5616 CF
Stainless steel window handle
p.207

5070/5616 CF
Stainless steel window handle
p.214

5057-280/5619K
Stainless steel handle PSK + HST
p.235

8.3 Handles for balcony doors

Stainless steel handle PSK + HST
5057-280/5619K

Product profile
For parallel sliding doors with tilt system and normal sliding doors. The parallel sliding door can be slid parallel by the integrated ball stop when the handle is positioned sideward and the door can be moved in tilt position when the handle points upwards. Suitable for metal, wooden and plastic frame windows.

Standard version
- Handle 280 mm, ø 20 mm
- Solid satin stainless steel
- Square spindle 10 x 50 mm
- Projection 75 mm
- **Plate:**
- Size: 160 x 34 x 15 mm
- For fixing screws M5
- Fixing centres 80 mm

Options
- PZ 69 mm: 188 x 34 x 15 mm
- RZ 70 mm: 188 x 34 x 15 mm
- Square spindle 10 x 40 mm
- For fixing screws M6
- Polished stainless steel
- Other executions upon request

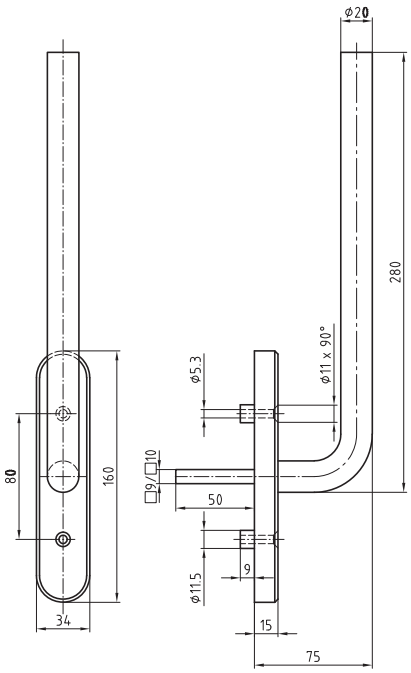

5057
Stainless steel lever handle
p.36

5070
Stainless steel lever handle
p.45

5057/5616 CF
Stainless steel window handle
p.207

5070/5616 CF
Stainless steel window handle
p.214

5057-280/5613
Stainless steel handle PSK + HST
p.234

8.3 Handles for balcony doors

Stainless steel handle PSK + HST
5071-280/5613

Product profile
For sliding-doors

Standard version
- Handle 280 mm, ø 20 mm
- Satin stainless steel
- Square spindle 10 x 50 mm
- Projection 61 mm
- **Plate:**
- Size: 160 x 34 x 2 mm
- For fixing screws M5
- Fixing centres 80 mm

Options
- PZ 69 mm: 188 x 34 x 2 mm
- RZ 70 mm: 188 x 34 x 2 mm
- Square spindle 10 x 40 mm
- For fixing screws M6
- Polished stainless steel
- Other executions upon request

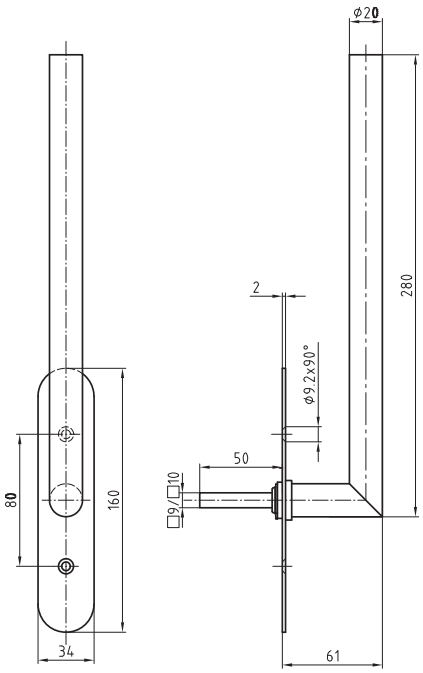

5071
Stainless steel lever handle
p.46

5073
Stainless steel lever handle
p.47

5071/5616 CF
Stainless steel window handle
p.215

5073/5616 CF
Stainless steel window handle
p.216

5071-280/5619K
Stainless steel handle PSK + HST
p.237

8.3 Handles for balcony doors

Stainless steel handle PSK + HST
5071-280/5619K

Product profile
For parallel sliding doors with tilt system and normal sliding doors. The parallel sliding door can be slid parallel by the integrated ball stop when the handle is positioned sideward and the door can be moved in tilt position when the handle points upwards. Suitable for metal, wooden and plastic frame windows.

Standard version
- Handle 280 mm, ø 20 mm
- Solid satin stainless steel
- Square spindle 10 x 50 mm
- Projection 70 mm
- **Plate:**
- Size: 160 x 34 x 15 mm
- For fixing screws M5
- Fixing centres 80 mm

Options
- PZ 69 mm: 188 x 34 x 15 mm
- RZ 70 mm: 188 x 34 x 15 mm
- Square spindle 10 x 40 mm
- For fixing screws M6
- Polished stainless steel
- Other executions upon request

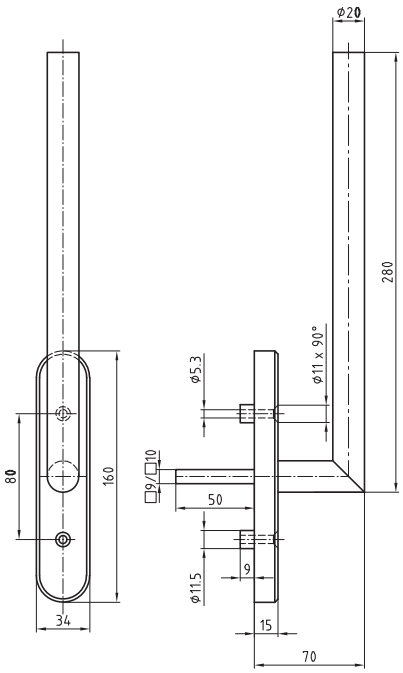

5071
Stainless steel lever handle
p.46

5073
Stainless steel lever handle
p.47

5071/5616 CF
Stainless steel window handle
p.215

5073/5616 CF
Stainless steel window handle
p.216

5071-280/5613
Stainless steel handle PSK + HST
p.236

8.3 Handles for balcony doors

Stainless steel handle PSK + HST
5155-280/5613

Product profile
For sliding-doors

Standard version
- Handle 280 mm, ø 22 mm
- Satin stainless steel
- Square spindle 10 x 50 mm
- Projection 78 mm
- Without raster
- **Plate:**
- Size: 160 x 34 x 2 mm
- For fixing screws M5
- Fixing centres 80 mm

Options
- PZ 69 mm: 188 x 34 x 2 mm
- RZ 70 mm: 188 x 34 x 2 mm
- Square spindle 10 x 40 mm
- For fixing screws M6
- Polished stainless steel
- Other executions upon request

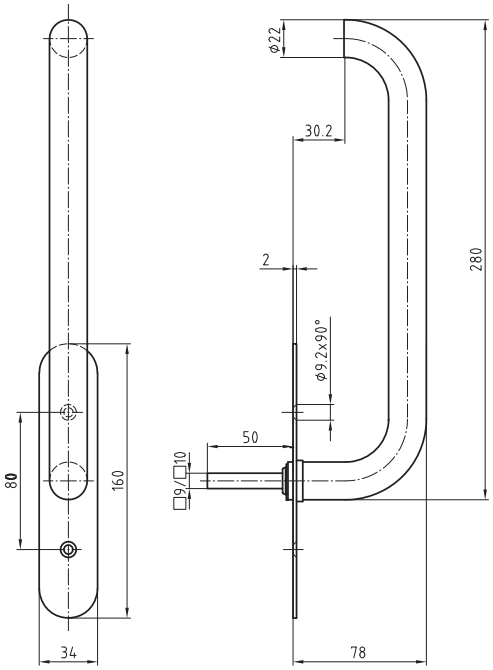

5055
Stainless steel lever handle
p.34

5054
Stainless steel lever handle
p.33

5054/5616 CF
Stainless steel window handle
p.205

5155-280/5619K
Stainless steel handle PSK + HST
p.239

8.3 Handles for balcony doors

Stainless steel handle PSK + HST
5155-280/5619K

Product profile
For parallel sliding doors with tilt system and normal sliding doors. The parallel sliding door can be slid parallel by the integrated ball stop when the handle is positioned sideward and the door can be moved in tilt position when the handle points upwards. Suitable for metal, wooden and plastic frame windows.

Standard version
- Handle 280 mm, ø 22 mm
- Solid satin stainless steel
- Square spindle 10 x 50 mm
- Projection 85 mm
- **Plate:**
- Size: 160 x 34 x 15 mm
- For fixing screws M5
- Fixing centres 80 mm

Options
- PZ 69 mm: 188 x 34 x 15 mm
- RZ 70 mm: 188 x 34 x 15 mm
- Square spindle 10 x 40 mm
- For fixing screws M6
- Polished stainless steel
- Other executions upon request

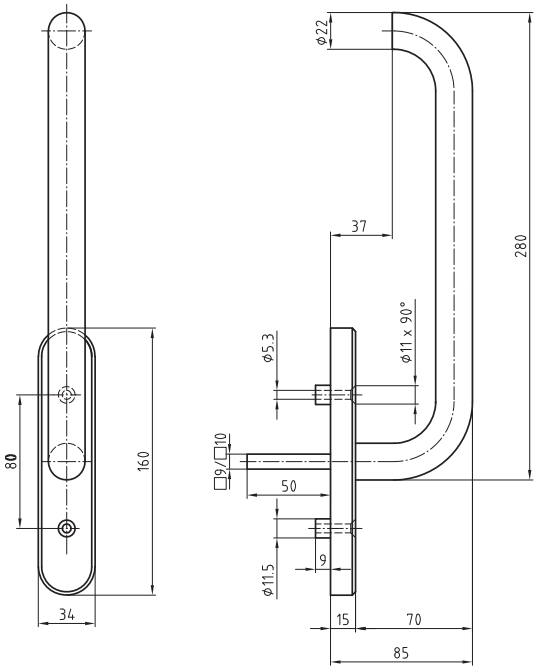

5055
Stainless steel lever handle
p.34

5054
Stainless steel lever handle
p.33

5054/5616 CF
Stainless steel window handle
p.205

5155-280/5613
Stainless steel handle PSK + HST
p.238

8.3 Handles for balcony doors

Stainless steel handle PSK + HST
6016-280/6143

Product profile
For sliding-doors

Standard version
- Handle 280 mm, ø 20 mm
- Satin stainless steel
- Square spindle 10 x 50 mm
- Projection 65 mm
- **Plate:**
- Size: 160 x 34 x 15 mm
- For fixing screws M5
- Fixing centres 80 mm

Options
- PZ 69 mm: 188 x 34 x 15 mm
- RZ 70 mm: 188 x 34 x 15 mm
- Square spindle 10 x 40 mm
- For fixing screws M6
- Polished stainless steel
- Other executions upon request

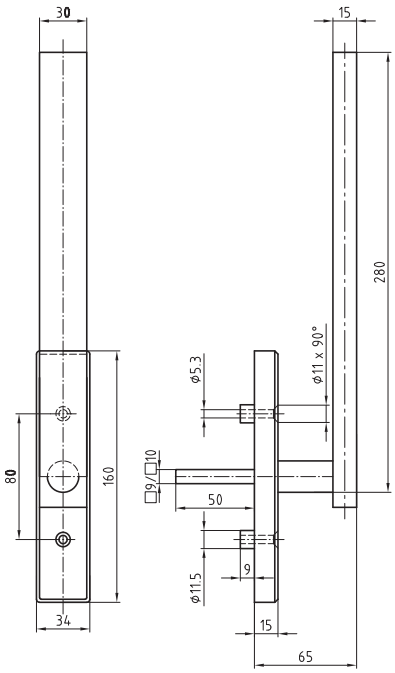

6016
Stainless steel lever handle
p.67

6031
Stainless steel lever handle
p.70

6032
Stainless steel metal frame lever handle
p.153

6030
Stainless steel turn
p.69

8.4 Window handle drive

Stainless steel window drive
8500

Standard version
- Cover in satin stainless steel
- 117x34,5x23,5 mm
- Left/right applicable
- Fixing centres 84/98 mm
- Adapters see page 243
- Suitable for all Glutz window handles
- Handle to be ordered seperatly
- Picture shows 8500 with 5070

Options
- Cover in polished stainless steel
- Stainless steel PVD-coated, brass coloured
- Stainless steel RAL-coated, in acc. with colour chart
- 8500 DC Spindle rose

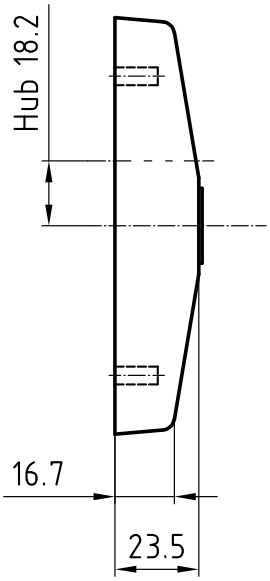

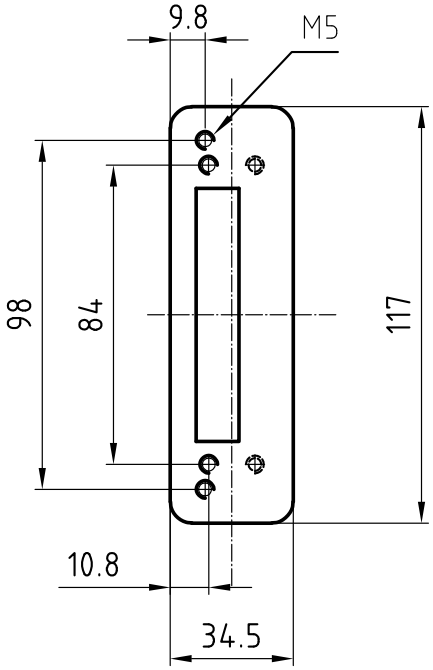

8.4 Window handle drive

Window spindle rose
8500 DC

Standard version
- Cover in satin stainless steel
- 117x34,5x23,5 mm
- Left/right applicable
- Fixing centres 84/98 mm
- With spindle drive

Options
- Cover in polished stainless steel
- Stainless steel PVD-coated, brass coloured
- Stainless steel RAL-coated, in acc. with colour chart

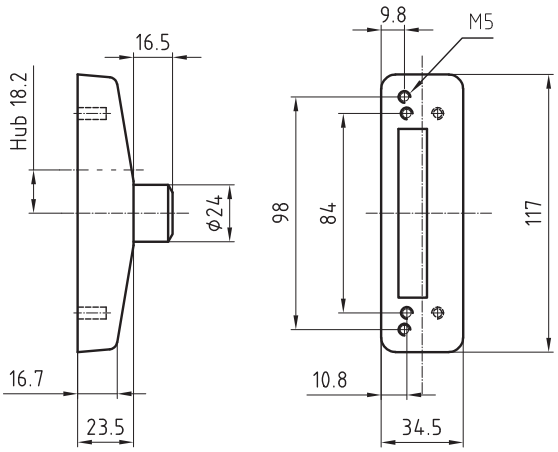

8.4 Window handle drive

Adapters

Adapters available for the following systems:

ROTO R26B

ROTO R32B

Winkhaus Janissol

Schüco

SIEGENIA S3101

SIEGENIA S3101V
Extended adapter

Product overview

9. Pull handles

9.1 Pull handles

5750/5751
p. 245

5760/5761
p. 246

5765/5766
p. 247

5770/5771
p. 248

5780/5781
p. 249

5785/5786
p. 250

Stainless steel pull handles
5750/5751

Product profile
The classic one

Standard version
- D = Pull handle ø 19 mm
- Satin stainless steel
- L = Fixing centres:
  130, 200, 250, 300, 350, 400 mm
- H = Projection 65 mm
- R = Radius 27mm
- Pull handle fixings see page 251

Options
- Polished stainless steel
- Other lengths upon request

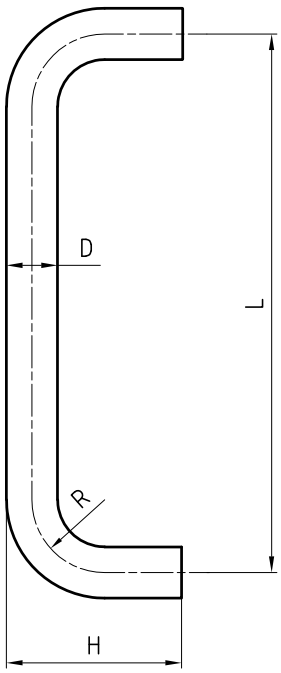

9.1 Pull handles

Stainless steel pull handles
5760/5761

Product profile
For high requirements

Standard version
- D = Pull handle ø 25, 31 mm
- Satin stainless steel
- L = Fixing centres:
  ø 25: 250, 300, 350 mm
  ø 31: 300, 350, 400, 500, 600 mm
- H = Projection:
  ø 25 = 75 mm
  ø 31 = 80 mm
- R = Radius:
  ø 25 = 39 mm
  ø 31 = 40 mm
- Pull handle fixings see page 251

Options
- Polished stainless steel
- Other lengths upon request

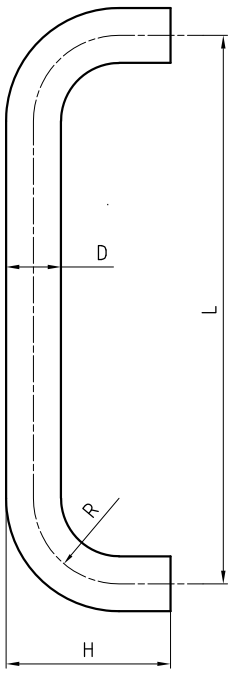

Stainless steel pull handles
5765/5766

Product profile
Straight design

Standard version
- D = Pull handle ø 31 mm
- Satin stainless steel
- L = Fixing centres:
  ø 31: 300, 350, 400, 500 mm
- H = Projection 80 mm
- Pull handle fixings see page 251

Options
- Polished stainless steel
- Other lengths upon request
- Other diameters upon request

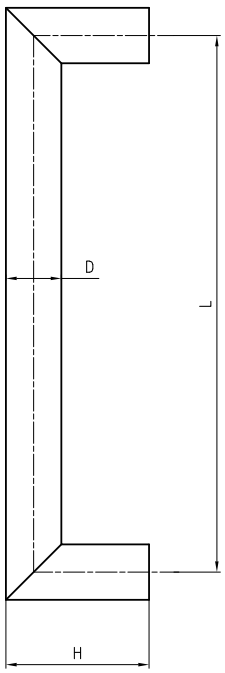

9.1 Pull handles

Stainless steel pull handles
5770/5771

Product profile
Cranked design

Standard version
- D = Pull handle ø 25, 31 mm
- Satin stainless steel
- L = Fixing centres:
  ø 25: 250, 300, 350, 400 mm
  ø 31: 300, 350, 400, 500, 600 mm
- H = Projection:
  ø 25 mm = 80 mm
  ø 31 mm = 85 mm
- Breadth:
  ø 25 mm = 133 mm
  ø 31 mm = 150 mm
- Pull handle fixings see page 251

Options
- Polished stainless steel
- Other lengths upon request
- Other diameters upon request

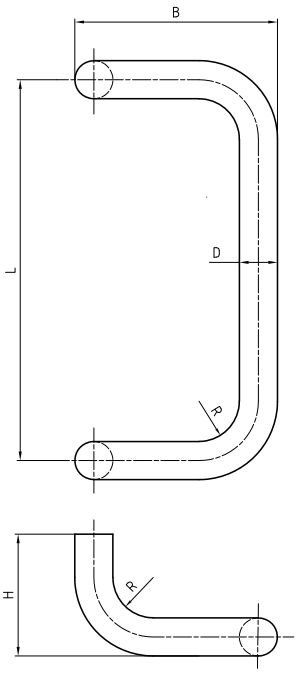

9.1 Pull handles

Stainless steel pull handles
5780/5781

Product profile
The curved one

Standard version
- D = Pull handle ø 25, 31 mm
- Satin stainless steel
- L = Fixing centres:
  ø 25: 250, 300, 350, 400 mm
  ø 31: 300, 350, 400 mm
- H = Projection:
  ø 25 mm = 75 mm
  ø 31 mm = 80 mm
- R = Radius 40 mm
- Pull handle fixings see page 251

Options
- Polished stainless steel
- Other lengths upon request
- Other screw lengths
- Other diameters upon request

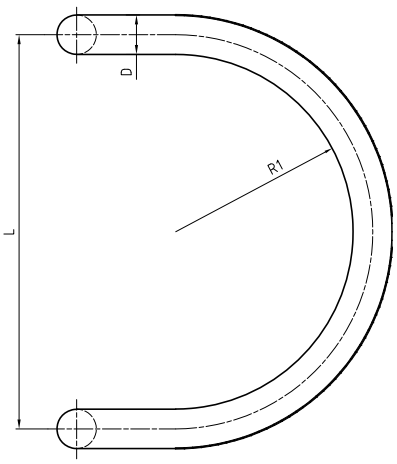

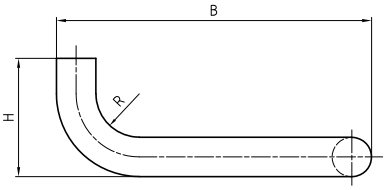

9.1 Pull handles

Stainless steel pull handles
5785/5786

Product profile
Elegantly shaped

Standard version
- D = Pull handle ø 25, 31 mm
- Satin stainless steel
- L = Fixing centres:
  ø 25: 200, 300, 350, 400, 500 mm
  ø 31: 200, 300, 350, 400, 500 mm
- H = Projection:
  ø 25 mm = 75 mm
  ø 31 mm = 80 mm
- Pull handle fixings see page 251

Options
- Polished stainless steel
- Other lengths upon request
- Other diameters upon request

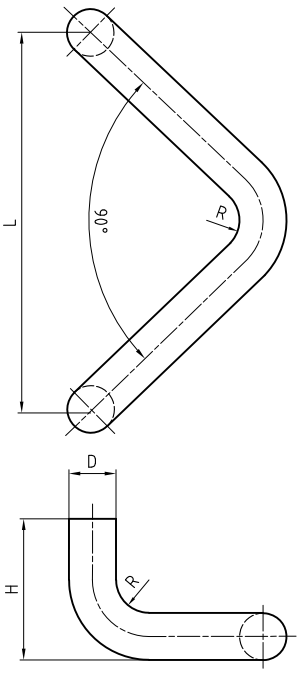

Correct pull handle fixing

Glutz stainless steel pull handles are available in the sizes 19, 25, 31 and 38 millimetres, depending on pin axis size. As well the shape and weight, the type of fastening is also an important criterion. The following six fastening types are available:

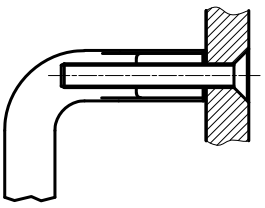

Single bolt
through fixing
with
M8 x 80mm

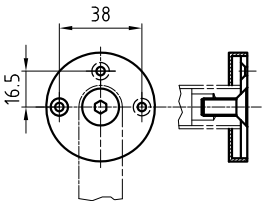

5385C
Single bolt
with front fixing rose

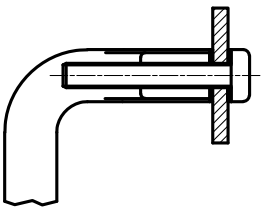

5791
Single bolt
bolt through fixing with
M8 x 90/120

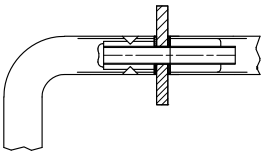

5790
Back to back fixing in pairs
bolt through fixing with
M8 x 90/120

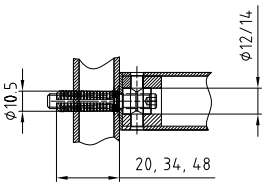

5794S
Single bolt
invisible, with straddling dowel,
for timber, metal and
plastic doors,
with dowel length 20, 34 and 48mm

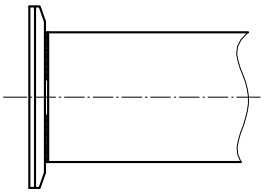

5794A
Stainless steel plate,
for elegant fixing
of all types of doors.
Supplied with a rubber
washer.

Product overview

10. Panic exit devices

10.1 Panic exit devices

8614 For panic exit devices EN 1125
p. 253

8621 For panic exit devices
p. 254

8615 For panic exit devices EN 1125
p. 255

5362C For panic exit devices
p. 256

8616 Pushbar
p. 257

10.1 Panic exit devices

Panic exit devices

8614 For panic exit devices EN 1125

EN 1125

Product profile
For commercial and public buildings where the doors are equipped with an antipanic lockcase. By pressing the bar, the antipanic lockcase is operated and the room can be evacuated.

Standard version
- Execution without square spindle
- Satin stainless steel
- Bar ø 25 mm, length 1100 mm
- Follower 9 mm
- Case of mechanism fixed on long plates
- Long plate 300x45x4 mm
- With fixing screws M4
- Indications left/right required
- DIN right for right handed doors
- DIN left for left handed doors
- For use with lock 1230 / 1231

Cutout
- 8614.00 blind
- 8614.2 RZ
- 8614.3 PZ

Quality standard
Tested to EN 1125 in combination with Glutz lock 1230 / 1231

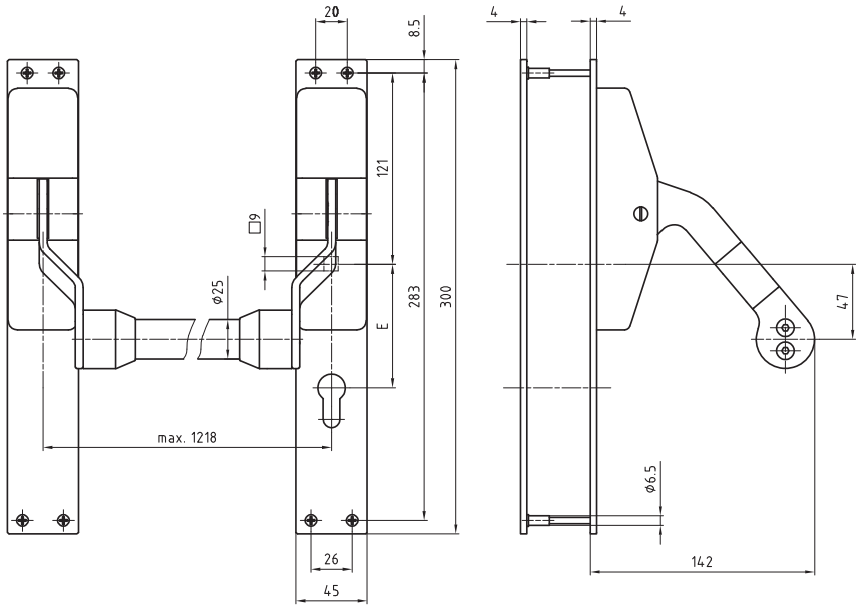

8621
Outside plate
p.254

1230
Heavy duty mortice lock, panic function E

1231
Heavy duty mortice lock, panic function D

10.1 Panic exit devices

Outside plate

8621 For panic exit devices

Standard version
- Length 300 mm
- Width 45 mm
- Projection 4 mm
- Satin stainless steel
- Guide 16 mm with Glutz glide easyfix®
- With 4 M4 threaded cams

Cutout
- 8621.00 blind
- 8621.0 blank
- 8621.2 RZ
- 8621.3 PZ
- 8621.02 RZ without guide
- 8621.03 PZ without guide

Options
- Polished stainless steel
- Guide 16 mm for Glutz needle bearing
- Glutz easyfix®
- Knob fixing

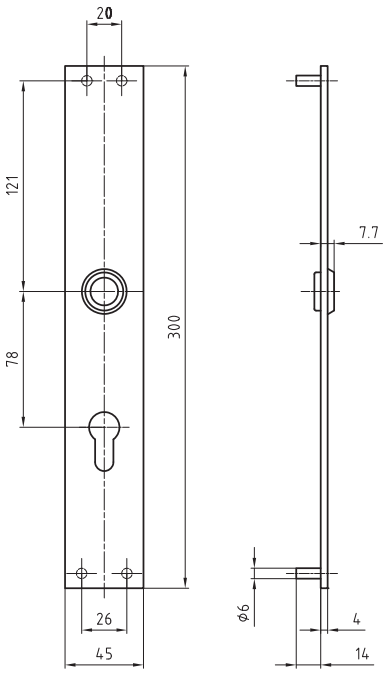

8614
Panic exit devices
p.253

10.1 Panic exit devices

Panic exit devices

8615 For panic exit devices EN 1125

EN 1125

Product profile

For commercial and public buildings where the doors are equipped with an antipanic lockcase. By pressing the bar, the antipanic lockcase is operated and the room can be evacuated.

Standard version

- Execution without square spindle
- Satin stainless steel
- Flat-oval pipe
- Length 1118 mm
- Profile 30/15
- Follower 9 mm
- Case of mechanism fixed on base plate
- Clip cover 250x35x25 mm
- For use with lock 1230 / 1231

Cutout

- 8615.00 blind
- 8615.2 RZ
- 8615.3 PZ

Quality standard

To tested to EN 1125 in combination with Glutz locks 1230 / 1231

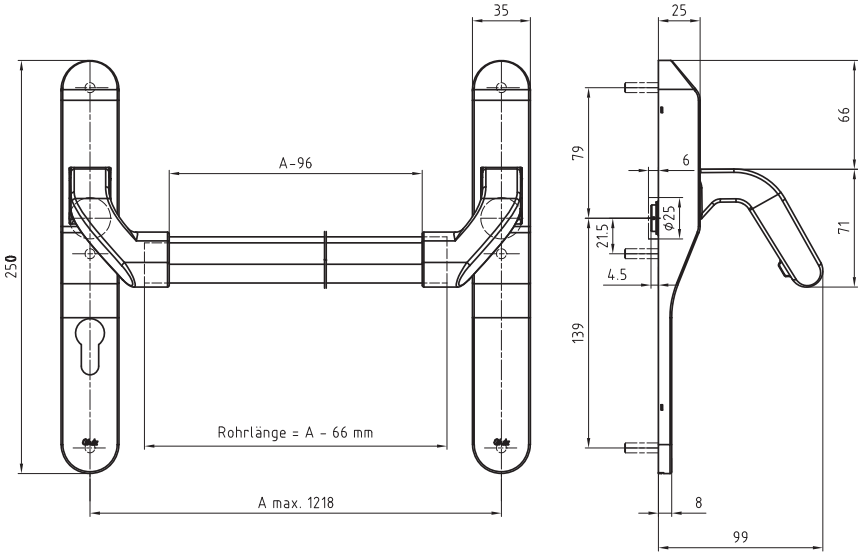

5362C
Stainless steel metal frame clip on long plate
p.256

1230
Heavy duty mortice lock, panic function E

1231
Heavy duty mortice lock, panic function D

Stainless steel metal frame clip on long plate

5362C For panic exit devices

Standard version
- Length 250 mm
- Width 35 mm
- Projection 8 mm
- Satin stainless steel
- 16 mm guide for Glutz glide
- Threaded cam M6

Cutout
- 5362.0C blank
- 5362.1C BB standard keyhole
- 5362.2C RZ round cylinder
- 5362.3C PZ profile cylinder
- 5362.8C PRZ
- 5362.9C OVZ oval cylinder
- Cutouts for lever handles
- .19 for lever handles ø 18 mm
- .21 for lever handles ø 20 mm
- .23 for lever handles ø 22 mm

Options
- Polished stainless steel
- RAL lacquered
- PVD lacquered
- Glutz needle bearing 16 mm
- 16 mm twin, semi-outside
- 16 mm twin, outside
- Glutz easyfix®
- Knob fixing

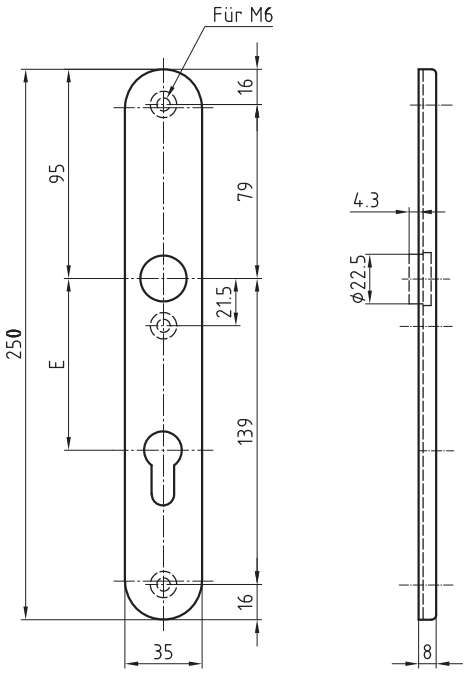

8615
Panic exit devices
p.255

5363C
Stainless steel metal frame long security plate
p.192

5364C
Stainless steel metal frame clip on long plate
p.183

5359
Stainless steel metal frame long plate
p.180

Pushbar for metal frame doors

8616 Pushbar

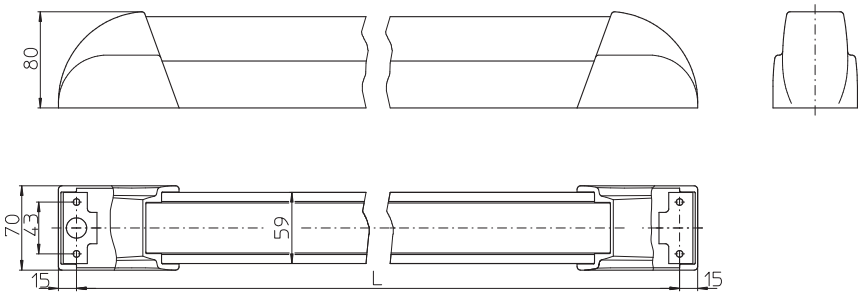

Product profile
Push bar for active door leaves with a 30º pivot angle and40º for inactive door leaves

Standard version
- Push bar (U profile) including cover
- Satin stainless steel
- Short constructional depth (80mm)
- Usable for DIN right/DIN left
- Handle bar width 1000, 1250 mm
- Wing width 1050, 1300 mm

Options
- Various lengths on request

Product overview

11. Bicolor - builders hardware

11.1 Bicolor

5067
Prestige Basle
p. 259

5267
Elite Basle
p. 260

5067/5616 CF
Prestige Basle
p. 261

5095
Prestige Ascona
p. 262

5095/5616 CF
Prestige Ascona
p. 263

11.1 Bicolor

Die cast Zinc lever handle
5067 Prestige Basle

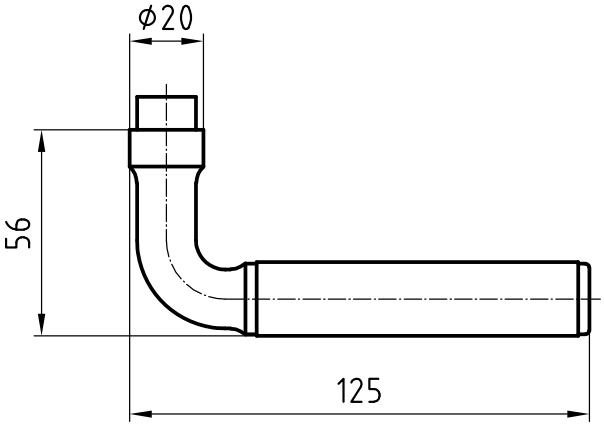

Product profile
The product range 'Basle' was created in co-operation with the architects Diener & Diener. The range comprises the 5067 for domestic accommodation, and the slightly larger 5267 for commercial buildings. For fire rated doors, model 5287 should be used. With their stainless steel shoulder, the 5087 and 5287 form a high-quality complement to this model.

Standard version
- Lever handle length 125 mm, ø 20 mm
- Projection 56 mm
- Square spindle 8 mm
- Satin nickeled ZNmn shoulder
- Satin stainless steel tube
- 16 mm guide
- Picture shows handle with 5620C rose

Options
- Brass, chromed and polished ZNpc shoulder
- Square spindle 8,5 mm or 9 mm
- Tubes available in:
- Stainless steel PVD-coated, brass coloured
- Stainless steel RAL-coated, in acc. with colour chart

5267
Die cast Zinc lever handle
p.260

5087
Stainless steel lever handle
p.52

5287
Stainless steel lever handle
p.65

5067/5616 CF
Die cast Zinc window handle for tilt and turn systems
p.261

8500
Stainless steel window drive
p.241

11.1 Bicolor

Die cast Zinc lever handle
5267 Elite Basle

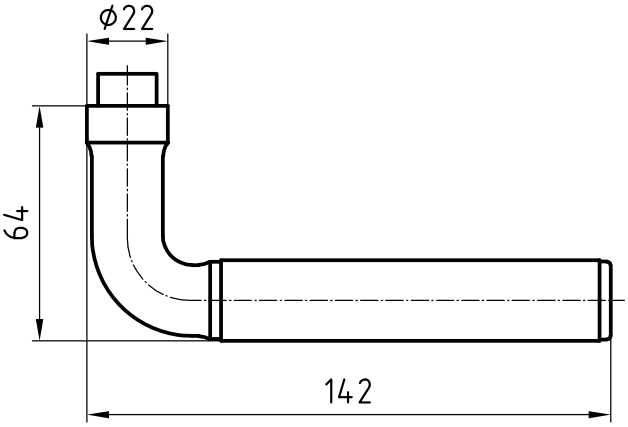

Product profile
The product range 'Basle' was created in co-operation with the architects Diener & Diener. The range comprises the 5067 for domestic accommodation, and the slightly larger 5267 for commercial buildings. For fire rated doors, model 5287 should be used. With their stainless steel shoulder, the 5087 and 5287 form a high-quality complement to this model.

Standard version
- Lever handle length 130 mm, ø 22 mm
- Projection 64 mm
- Square spindle 9 mm
- Satin nickeled ZNmn shoulder
- Satin stainless steel tube
- 16 mm guide
- Picture shows handle with 5620C rose

Options
- Brass, chromed and polished ZNpc shoulder
- Tubes available in:
- Stainless steel PVD-coated, brass coloured
- Stainless steel RAL-coated, in acc. with colour chart

5067
Die cast Zinc lever handle
p.259

5087
Stainless steel lever handle
p.52

5287
Stainless steel lever handle
p.65

5067/5616 CF
Die cast Zinc window handle for tilt and turn systems
p.261

8500
Stainless steel window drive
p.241

11.1 Bicolor

Die cast Zinc window handle for tilt and turn systems

5067/5616 CF Prestige Basle

Product profile

The product range 'Basle' was created in co-operation with the architects Diener & Diener. The range comprises the 5067 for domestic accommodation, and the slightly larger 5267 for commercial buildings. With their stainless steel chassis, the 5087 and 5287 form a high-quality complement to this model.

Standard version

- Window handle 125 mm
- Satin nickeled ZNmn shoulder
- 4 x 90° ball stop
- Left/right applicable
- Square spindle 7x32mm
- Clip on rose CRNI satin finish 5616 CF
- 72x29x12 mm
- Projection 68 mm
- Fixing centres 43 mm
- Studs ø 9,5/12 mm
- Suitable for all tilt and turn systems

Options

- Length of square spindle 7x24, 26, 35, 40, 114 (other spindle lengths upon request)
- Also available as a pair
- Brass, chromed and polished ZNpc shoulder
- Other RAL colors upon request

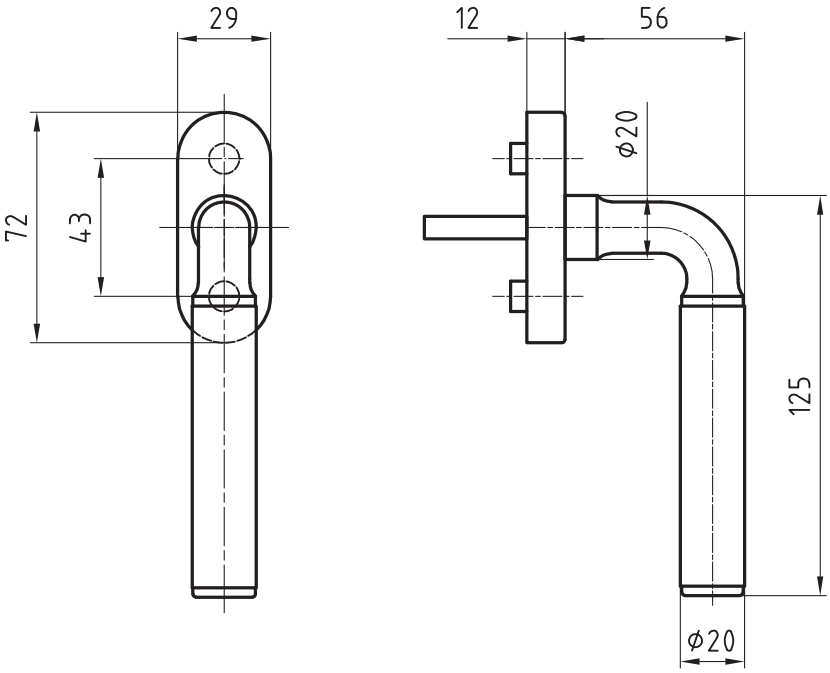

5067
Die cast Zinc lever handle
p.259

5267
Die cast Zinc lever handle
p.260

8500
Stainless steel window drive
p.241

5617 A
Stainless steel window handle
p.230

11.1 Bicolor

Brass lever handle
5095 Prestige Ascona

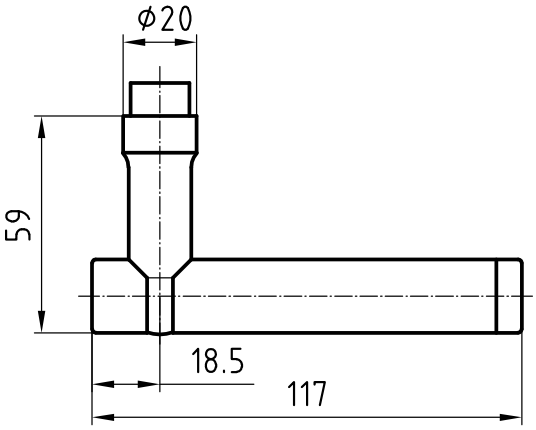

Product profile
This elegant handle appeals with its Art Deco design. The large selection of carefully matched colours and the superior finish ensure this model will enhance any door.

Standard version
- Lever handle length 117 mm, ø 20 mm
- Projection 59 mm
- Square spindle 8 mm
- Solid brass, chromed polished MScp shoulder
- Satin stainless steel tube
- 16 mm guide
- Female part
- Square spindle 5909 to order separately

Options
- Solid brass, polished MSp shoulder
- Tubes available in:
- Stainless steel PVD-coated, brass coloured
- Stainless steel RAL-coated, in acc. with colour chart

5095/5616 CF
Brass window handle
p.263

11.1 Bicolor

Brass window handle

5095/5616 CF Prestige Ascona

Product profile

This elegant handle appeals with its Art Deco design. The large selection of carefully matched colours and the superior finish ensure this model will enhance any door.

Standard version

- Window handle 117 mm
- Solid brass, chromed polished MScp shoulder
- 4 x 90° ball stop
- Left/right applicable
- Square spindle 7x32mm
- Clip on rose CRNI polished 5616 CF
- 72x29x12 mm
- Projection 71 mm
- Fixing centres 43 mm
- Studs ø 9,5/12 mm
- Suitable for all tilt and turn systems

Options

- Solid brass, polished MSp shoulder
- Length of square spindle 7x24, 26, 35, 40, 114 (other spindle lengths upon request)
- Tubes available in:
- Stainless steel PVD-coated, brass coloured
- Stainless steel RAL-coated, in acc. with colour chart

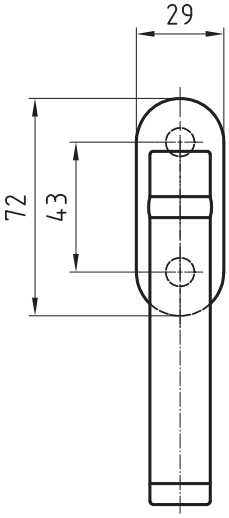

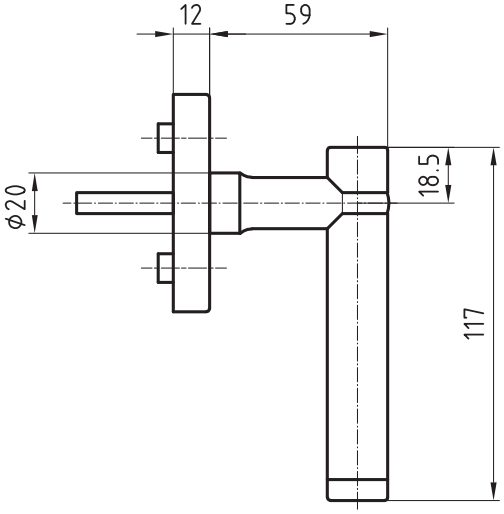

5095
Brass lever handle
p.262

Product overview

12. Accessories and fixing templates

12.1 Square spindles, screws, bush and cover plate

5905
p. 265

5909
p. 265

5910
p. 265

5911
p. 265

5916 With stop
p. 265

5920
p. 265

5906
p. 265

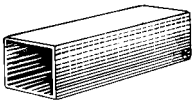

5917
p. 265

5922
p. 265

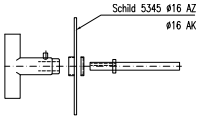

5923
p. 265

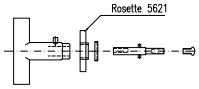

5924
p. 265

5907 Accessories
p. 265

12.2 Site fixing templates

12.1 Accessories and fixing templates

Square spindles, screws, bush and cover plate

5905
HESO spindle
One side offset drill-hole
Galvanised / stainless steel
8x110, 8x135, 8x160 mm
9x110, 9x135, 9x160 mm

5909
HESO spindle
Both sides offset drill-hole
Galvanised / stainless steel
8x110, 8x135, 8x160 mm
9x110, 9x135, 9x160 mm

5910
HESO spindle M10
One side offset drill-hole
Galvanised / stainless steel
8x110, 8x135, 8x160 mm
9x110, 9x135, 9x160 mm

5911
HESO spindle M10
One side offset drill-hole
Galvanised / stainless steel
Rotating
8x95, 8x110, 8x135 mm
9x95, 9x110, 9x135 mm

5916
HESO spindle
One side offset drill-hole
Galvanised
For one-side mounting of lever handle
8x60, 8x80 mm
9x60, 9x80 mm

5920
HESO panic-spindle
Both sides with HESO-groove
Galvanised / stainless steel
For locks with split follower
Adjustable screw M5
9x110, 9x170 mm

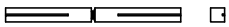

5906
Reducing adapter
In steel
Lengths 17 and 27 mm
7/8x17, 8/9x17, 9/10x17 mm
7/8x27, 8/9x27, 9/10x27 mm

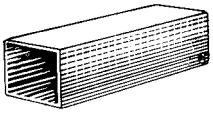

5917
HESO screw
Screw with hexagon socket
M6x8 mm
Stainless steel, hardened

5922
HESO spindle set
For one-side fitting of lever handle with guide 16 mm
Spindle galvanised with HESO screw
8x110, 9x110 mm

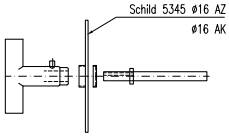

5923
HESO spindle set
For one-side fitting of turns with guide 16 mm
Spindle galvanised with HESO screw
7x60 mm
A = for doors 17–24 mm
B = for doors 24–31 mm

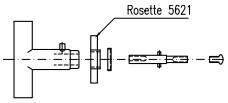

5924
Screws M4
In steel
With phillips-screwhead
For concealed fixing
Lengths 45, 65, 110 mm

5907
Fixing screws M4
Nickel plated
For visible fixing
Lengths 35, 40, 45, 50, 55, 60, 65, 70, 75, 80, 85, 90, 95, 100, 105 mm

12.2 Site fixing templates

Site fixing templates

No 202 and 203
For roses and escutcheons.
Adjustable centres 55 mm to 92 mm.

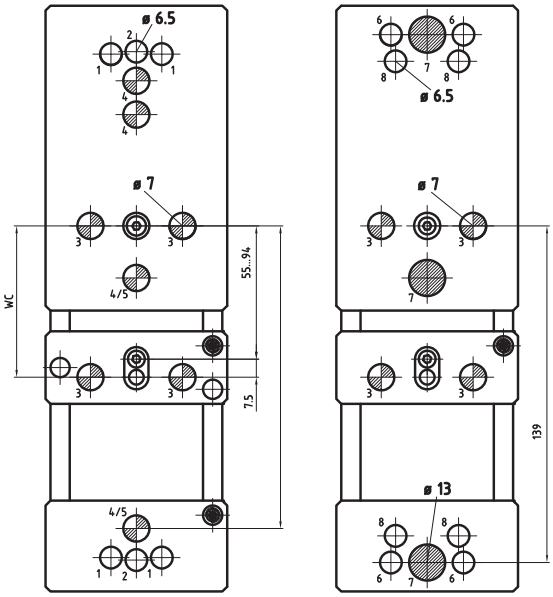

No 202 No 203

Legend

Site fixing template 202
1 = Plate 5345/5369 with 4 bushes
2 = Plate 5345 with 2 bushes
3 = Plate 5324/5380/5388 rosette 5620/5624/5628
4 = Plate 5347/5349 and 5390

Site fixing template 203
5 = Plate 5452
6 = Plate 5430 / 5432 / 5423 / 5424 / 5435 / 5465 / 5466 / 5467
7 = Plate 5341

Product overview

13. Pictograms, standards, tender texts, indications to order

13.1 Pictograms

13.2 Product liability

13.3 Glutz technology - important to know:

13.4 Glutz Colour chart

13.5 Tender texts

13.6 Indications to order

13.7 Standards and quality performances

13.1 Pictograms

Description of the pictograms

- Protective hardware tested to DIN 18257 - ES1 - L
- Class 2 anti-burglary protection to EN 1906

- Protective hardware tested to DIN 18257 - ES2 - L
- Class 3 anti-burglary protection to EN 1906

- Protective hardware tested to DIN 18257 - ES3 - L
- Class 4 anti-burglary protection to EN 1906

- Lock in door element tested in resistance class 2 to ENV 1627-1630

- Lock in door element tested in resistance class 3 to ENV 1627-1630

- Lock in door element tested in resistance class 4 to ENV 1627-1630

- Emergency exit door handle tested with all Glutz panic locks to EN 179
- Emergency exit door handle tested with various lock manufacturers (see www.glutz.com)

Please note: Lock and hardware must always be tested together

- Tested to EN 1906:
  Category of use class 3 with square drive made of galvanised steel
  Category of use class 4 with square drive made of stainless steel

- Panic hardware tested with all Glutz panic locks to EN 1125

Please note: Lock and hardware must always be tested together

- Approved for installation in fire and smoke control doors to DIN 18273 (applies to the hardware: from Glutz Professional)
- All locks from Glutz can be used for fire and smoke control doors. For more information, see www.vst.ch (subject: lock families)

13.2 Product liability

Important product information for locks and hardware

The following information for locks and hardware must be observed. Non-observance releases us from any liability.

1. Product information and approved use

A lock has the function of closing and locking a door. Many simple locking designs - also called catches - serve for closing only.
The term 'closing' is taken to mean keeping a door shut so that it cannot be opened by pulling and pushing, and must be opened by the simple operation of a latch.
The term 'locking' is taken to mean the securing of the closed door by means of a rigid bolt pushed out of the door-lock and engaging in the corresponding recess of the frame or striking plate.
Locks for doors with special functions should be selected in accordance with prevailing regulations and, if necessary, marked accordingly.

1.1
Lock cylinders can only be satisfactorily incorporated in locks, hardware, equipment, etc. which have been specifically designed for the corresponding lock cylinder. In all other cases, the manufacturer, dealer, fitter or user must ensure that the lock cylinder selected is suitable for installation and for the intended use. Mandatory legal requirements must be observed (e.g. emergency exits, lifts).

1.2
For environments with high levels of humidity, in cold stores, where there is direct exposure to weather, in proximity to the sea or for use in aggressive, corrosive environments, hardware, locks and lock cylinders of special design must be specified. The same applies to lock cylinders for application in a particularly dusty environment. If necessary, protection roses should be used to guard against the effects of exposure to adverse weather and dust.

1.3
Apart from proper interaction with the lock, correct assembly is a major requirement for the proper function of door hardware. This must be carried out in accordance with our assembly instructions. Drilling templates are supplied that are suitable for the various escutcheons and roses. Using these aids will ensure proper assembly. When door hardware is operated, significant forces are exerted. Only if the hardware has been carefully assembled with the appropriate aid and in accordance with our assembly instructions, trouble-free use can be guaranteed.

Important product information for locks and hardware

2. Incorrect use

2.1 Incorrect use of door hardware

Misuse - i.e. the inappropriate use - of door handle fittings exists if, for example the following apply:

- Through the introduction of foreign items or non-approved items into the lock or into the striking plate, correct operation is prevented,
- An intervention or modification is performed on the lock or striking plate, which results in a change in structure the mode of action or the operation,
- The locking bolt is used in its extended position, contrary to instructions, to hold open the door
- The lock components are installed or treated in such a way as to impede the correct operation, e.g. being painted over,
- Excessive pressure or turning movement exceeding normal hand-strength and not in accordance with instructions are applied to the handle,
- Inappropriate, different or wrongly adjusted lock mechanisms are used,
- An increase or reduction in the required clearance between door frame and door leaf arises when adjusting the hinge or hanging the door,
- A double door is opened by the slave leaf, contrary to instructions,
- When closing doors, binding occurs between the door leaf and the frame,
- A simultaneous latch and locking mechanism operation occurs,
- Door closers are wrongly adjusted.

2.2 Incorrect use of door hardware

Misuse - i.e. the inappropriate use - of door handle fittings exists if, for example the following apply:

- Assembly did not take place in accordance with the assembly instructions supplied with the product,
- When assembling roses, the holes were not made with the required diameter, the escutcheons and roses will slip around on the surface of the door as a result,
- Holes were drilled without using the drilling template,
- Hardware was ordered for the wrong door thickness,
- The HESO connection was not assembled in accordance with our instructions,
- The square spindle is too long or too short. This may prevent the HESO pin from operating in the correct area,
- The door hardware and the locks do not match,
- Our own products have been used in combination with products supplied by other manufacturers.

Important product information for locks and hardware

3. Product performances

Where the product performance is not firmly stated in our catalogues, brochures, specifications, etc. the performance requirements of the individual hardware and locks must be agreed with us.
The performance capability of hardware and locks, amongst other things, depends on frequency of operation, method of operation, environment and maintenance.
Lock, lock cylinder, hardware and lock mechanisms must be replaced as soon as faults appear, despite proper maintenance, particularly when inserting or removing the key.

4. Product maintenance

Locks must be lubricated at least once a year, without opening the case of the lock - more often if required - with suitable lubricants. Correct operation of the equipment, for example, lock, locking mechanism, hardware and striking plate, has to be checked and established.
Only cleaning materials which contain non-corrosive constituents can be used.

5. Information and instruction duties

To provide information and instructions, the following documentation will be at the disposal of specialist dealers, key services, architects, planners, consultants, processors or users:

- Relevant EN-, ENV- and DIN-standards
- Specific standard
- Catalogues, brochures
- Lock drawings
- Instructions for installation, operation and maintenance
- On-site advice and training

With regard to selecting locks and hardware, as well as installation, operation and maintenance:

5.1
Architects, planners and consultants must request from us and observe all necessary product information.

5.2
Specialist dealers must observe the product information and in particular request all necessary instructions from us and pass them on to the fitters and users.

5.3
Processors must observe all product information and in particular request from us operation and maintenance instructions and pass them on to customers and users.

13.3 Glutz technology - important to know:

Teamwork on doors

Glutz is one of the few suppliers in Europe to manufacture both hardware and locks itself. It's been doing so for well over one hundred years now. Glutz products are modular in design and are optimally matched to combine with each other. They fit together, complement each other to form a mechatronic or mechanical system and can thus be used together for a wide range of projects and applications.

That is why the choice and specification of a Glutz product, whether it be the electronic, a door handle, a doorplate or a lock, should always be made taking the use for which they are intended and the other products in the door system into account. In this way, Glutz benefits such as smooth closing and burglar protection can be fully utilised.

Small separate parts, which frequently do not seem to be relevant to the design, ultimately play a decisive role in whether the products fit together in situ on the object, and whether the door system fulfils the purpose for which it was intended. At this stage, the world of technical jargon comes into play. Expressions such as 'fixed mobile', 'follower', and 'spindle dimension', are typical examples. The following sections of the chapter are dedicated to these individual parts and to the accompanying jargon. They are intended as an illustration of the high standard of quality and the carefully designed details of Glutz products. Glutz also wishes to make the world of locks and hardware somewhat more accessible to readers who are not necessarily familiar with this particular field.

Glutz Eypos®

Glutz Infoline®

Glutz locking technics

Glutz builders hardware

13.3 Glutz technology - important to know:

Fixed connections

With heavy doors and when using door closers, high axial and torsional forces are exerted on the door handle sets. In order to ensure these components have a high degree of rigidity, the door handles and door knobs must be fixed with the door handle rose or escutcheon in fixed mobile configuration in addition to the lever handle square spindle connection.

To this end, Glutz has developed the Glutz easyfix® connection.The door handle roses and escutcheons are factory-fitted with Glutz easyfix® components and are delivered as a complete unit. Together with all usual Glutz door handles and door knobs, these parts form the Glutz easyfix® system. Patent protection has been applied for on this innovative system.

By applying this special interlocking/plug-in connection on all versions, a stable fixed mobile connection of the door handle or door knob with the door handle roses or escutcheons can be achieved. This system is available for all products within the professional range. On all other product ranges, fixed mobile is made with a circlip.

The guide elements in the escutcheons and base plates are of consistent dimensions, which enables the use of different types of bearing - such as Glutz glide, Glutz needle bearing and of course, the two Glutz twin versions.

With the HESO connection system developed by Glutz in-house, penetration of the pin occurs during assembly of the door handle. The door handle set screw thus remains firmly fixed in the specially designed HESO square profile spindle. If assembly has been performed correctly, it is not possible for the door handle to become loose. Correct assembly means that the HESO screw is positioned at least 10 mm from the spindle end and is tightened until it can clearly be felt to penetrate.

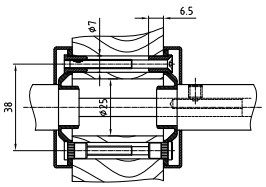

HESO handle connection principle

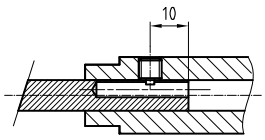

Distance for correct assembly

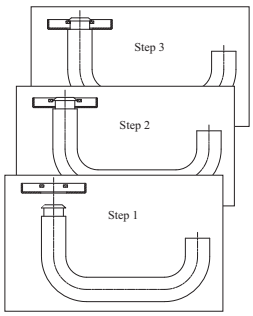

Function scheme for Glutz easyfix®

13.3 Glutz technology - important to know:

The perfect guide

Door handles from Glutz are optimally embedded in their escutcheons and roses by means of Glutz sliding bearings or Glutz needle bearings featuring hardened steel needles. Both sliding bearings and needle bearings have guides which give the hardware a snug-fitting mechanism, ensuring long service life.

The Glutz glide high-performance sliding bearing made of high-quality polymer is specially designed to meet the operating requirements of Glutz door handle bearings. Glutz glide is self-lubricating; it is designed for dry operation, and is completely maintenance-free. It can be applied in normal doors and fire-rated doors. Specially designed for this application, the material is resistant to impact, has high damping properties and is suitable for application in ambient temperatures of -40° and +140°.

The compact design of the new Glutz needle bearing provides a slim, elegant door handle bearing solution. The installation of the new Glutz needle bearing is externally the same as for the Glutz sliding bearing. The low level of rolling friction on the Glutz needle bearing, combined with its high radial load resistance, ensure that Glutz needle bearings have a very long service life. Their major benefits are achieved using hardened non-rusting needles. They are completely maintenance-free and designed for extremely demanding applications. The position of the guide relative to the plate (external, central, internal) is essential when choosing the correct variant, as is the handle diameter. Here, the thickness of the door itself and the position of the door lock are important.

As an option Glutz escutcheons and roses can also be fitted with Glutz twin glide and Glutz twin needle bearings. This Glutz twin bearing is made up of two bearings arranged within each other. It is specially designed for extremely demanding operating requirements and loads. Typically, it is used in hospitals, schools, residential homes, military buildings and industrial buildings. Its twin guide ensures the door handles have optimal guide length for these application requirements.

The fitter will determine the specifications for the relevant guide variant, particularly in the event of non-standard equipment.

Guides

Glutz glide internal

Glutz needle bearing (NL) internal

Glutz glide external

Glutz NL external

Glutz twin glide internal

Glutz twin NL internal

Glutz twin glide semi-external

Glutz twin NL semi-external

Glutz twin glide external

Glutz twin NL external

Roses needle bearing

Knob fixing

External guides are also available in conical version

13.3 Glutz technology - important to know:

Spindles

When we talk of a spindle, we mean the square profile pin connecting the two door handles inside and outside firmly together. At Glutz, it is the HESO square profile pin with an eccentric drilled hole which fulfils this function perfectly.

Although this connecting part is nothing much to look at, correct specification requires a certain amount of specialist skill. The length and thickness of the square profile pin are particularly important, as is the length of the eccentric hole.

At Glutz, we define the length of the square profile pin in mm as the length of the guide plus the length of the part of the square profile pin protruding from the doorhandle.

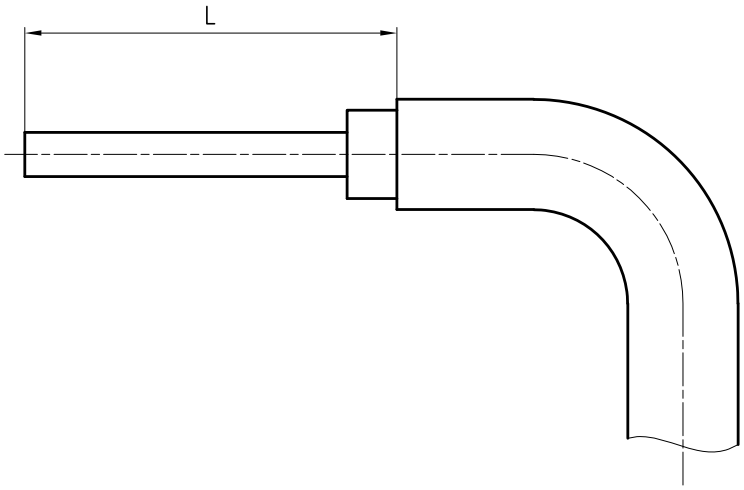

Defining square profile pin length

HESO square spindles are available from Glutz in various standard lengths, but please note that the recommended standard length can vary depending on the door handle model. Standardisation means that the range available from the retailer covers most requirements.

It is important when ordering to know the thickness of the door, the choice of plate or rose, and the type of guide. The fitter is responsible for submitting the correct details to Glutz. This includes the correct specification of the square spindle thickness. In the project area you should always use 9 mm square spindles, as they provide 20-25% greater rotating stability than 8 mm square spindels. For fire protection purposes, we recommend the 9 mm square spindle (This is mandatory in Germany).

Glutz HESO square spindles are made of galvanised steel or stainless steel at option.

Of course, this by no means exhausts Glutz's technical knowledge about square spindles. There are other types of spindle for other functions, e.g. solid square spindles, split square spindles for knobsets, and panic square spindles combined with a split follower, and many others.

13.3 Glutz technology - important to know:

Left and right

When Glutz talks about left and right, we're not talking politics! We are talking about an essential detail you will need to provide us with when placing an order. This affects the specification for doorlocks, for three-dimensional handles and eccentric doorknobs.

But what is left and what is right? As far as door handles are concerned, this standard is the same as the relevant DIN Standard.

DIN Standard:

Hinges left

Hinges right

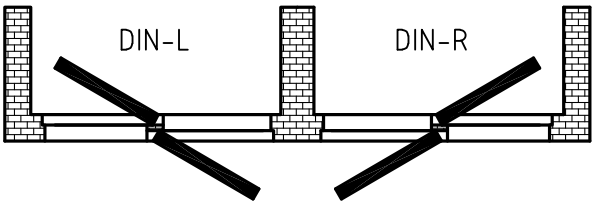

Mortice lock DIN left

Mortice lock DIN right

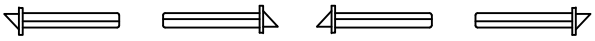

13.3 Glutz technology - important to know:

A hole isn't a hole

We're talking here about perforations, or cutouts, in plates and roses. These have different shapes, depending on the key and the type of cylinder. Glutz is represented in many countries world-wide. The range of cut-outs available is designed to meet the requirements of the most common locking systems in these countries.

At Glutz, cutouts are designated by the usual normed code and also with a number specific to Glutz. Glutz uses the following codes and numbers:

Code	Nr.	Cutout	Remarks
BB	.1	Standard key	Key, digital key
RZ	.2	Round cylinder	Mainly CH standard, size 22 mm
PZ	.3	Profile cylinder	Euro profile, 17 mm
WC	.4	Display on WC doors	Usually with a turn
RZW	.6	Round cylinder with latch withdrawal	
PZW	.7	Profile cylinder with latch withdrawal	
RPZ	.8	Profile round cylinder	Round profile cylinder
OVZ	.9	Oval cylinder	Continuous oval cylinder

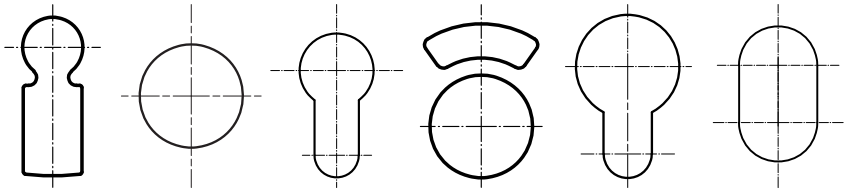

.1 .2 .3 .4 .8 .9

13.3 Glutz technology - important to know:

Escutcheons for all eventualities

When choosing door plates and roses, it is important first of all to bear in mind the type of location where the plates will be used and the requirements they will be subject to in everyday use. Will the plate be used indoors or outside? Do certain safety requirements need to be met?

Glutz covers the entire range and offers plates for inside and outside applications, security plates and kick plates.

The type of fixing connection to be used is another criterion to be considered when choosing plates and roses. Do you want the solution to be visible or not? Do you want a simple screwing solution, or a bolt-through solution? Here too, Glutz offers every type of variant.

With invisibly fixed solutions, the visible plate is clipped on to a substructure firmly screwed on to the door itself. In this way, the screws remain concealed.

For through fastening Glutz uses screws with Tuflok coating. This prevents the screws from working loose on their own. On external doors, bolt-through fixing is always from inside to outside, for security reasons.

A speciality of Glutz is the Secaport range. Security plates are a Glutz speciality. These provide doors with effective protection against unauthorised opening. Glutz security plates are graded to DIN-tested security norms. ES1 is available for protection against burglary, and ES2 and ES3 offer even greater burglary protection.

Within the Secaport range, Glutz has developed plates for use in connection with electronic locking systems. These plates are clipped on inside, and are hence universal in design, thus covering the various elements of the leading lock cylinder manufacturers.

13.3 Glutz technology - important to know:

Window handles

Glutz offers stainless steel window handles in the executions ball stop and leaf spring stop. Both are high quality products. They differ mainly in the mechanism. Ball stop is designed for the project area, providing greater ease of use for more demanding applications.

Window handles for the project area feature a rugged, long service life 4 x 90° ball stop. The window handles are usually supplied with a clip-on rose which conceals the securing screws. Glutz window handles can mostly be used for left and right-hand opening applications, with very few exceptions.

The mechanism used in the domestic area is based on a leaf spring stop 4 x 90°. This makes it for a less defined pressure point and catch end-point.

Glutz window rose 5617 A.
As a locking security device for windows, this model offers effective protection against the unauthorised opening of windows and balcony doors. Suitable for locking systems. Can be combined with most Glutz window handles. Used also for child safety. For detailed product description, see page 230.

13.3 Glutz technology - important to know:

Materials and surfaces with a long service life

Materials with a long service life

Stainless steel

Glutz products are intended for a long, maintenance-free service life, and this is reflected in the design and materials used. As a result of this philosophy and a strong presence in the construction industry, stainless steel traditionally plays a major role in the Glutz range of products.

The outstanding properties of stainless steel make it the ideal choice for application as the basic material for hardware. It is highly durable, scratch-resistant, low-maintenance, hygienic, anti-static, extremely corrosion-resistant, wear-resistant and resistant to the effects of weather and heat.

Over the years, manufacturers and fitters have used various synonyms for stainless steel, such as V2A, V4A and Inox. However, where consumer goods are concerned, the term 'stainless steel' has become standard. For the sake of clarity, rust-proof steels may also be identified by a specific material number, e.g. 1.4301.

At Glutz , it is precisely this 1.4301 / AISI 304 material that we use for the manufacture of our hardware. To comply fully with the requirements of certain markets, some products are also available in 1.4404 / AISI 316L, a significantly higher-grade material.

Surfaces

As a rule, the surfaces on Glutz stainless steel hardware are given just a mechanical finishing. Satin finish is the most common. Special grinding processes create an even, satin finish capable of withstanding external influences for decades.

Polished stainless steel is a slightly more exclusive surface finish. A number of mechanical operations create a mirror-smooth, smartly shining surface. The outstanding elegance is, however, somewhat sensitive to scratching. For this reason, polished stainless steel should preferably be used in situations where its elegance can be fully appreciated.

In addition to these purely mechanical surface finishes, Glutz also offers other finishes. Upon request, all products can be coated in RAL- or NCS colours or PVD treatment, everything to meet customer requests.

13.3 Glutz technology - important to know:

A handy assembly aid

Glutz works on a practical basis, in close co-operation with all its market partners. In the course of many years' co-operation with installation firms - especially with carpenters in Switzerland - has helped to create a number of handy installation tools and assembly aids. For instance, adjustable site fixing template for the installation of hardware, or milling gauges and step drills for lock technology. Appropriate mounting and scale drawings are also available on request.

The main purpose of all these tools is to make the installation of Glutz products as straightforward and sensible as possible, for all Glutz partners, and to achieve a high standard of quality in the entire system solution for doors and windows.

Drill No 300 For rear mounting of long striking plates B-1156/6.5
This special drill enables the rear mounting of the special screw type. Taptite 6/40 mm according DIN 7500 C.

Site fixing template 202/ 203 For roses and escutch-eons

Template No 204
For long striking plates B-1157/3.7 and 1156/6.5
With bit stop and tear out protection. This template is fixed on the frame by means of cramps. Overall length 1980 mm.

13.4 Glutz Colour chart

Colour chart

Most of Glutz hardware is available in these surfaces:

	Polished stainless steel		Blue, RAL 5010
	Satin stainless steel		Green, RAL 6002
	Polished brass		Grey, RAL 7038
	Ivory, RAL 1014		Brown, RAL 8014
	Yellow, RAL 1021		White, RAL 9010
	Red, RAL 3002		Black, RAL 9011

Glutz quote text for stainless steel door hardware

Glutz glide version
Standard key or cylinder cut-out door handle set:
Door handle set
With HESO square spindle (8 mm) For door thickness...
Rose base plate with glide guide and support cams for M4 screws
Door handle rose and key rose with clip-on cover for concealed fixing using lock-tight screws
Brushed satin stainless steel surface
e.g. Item: 5064/5620C glide / 5380C BB or PZ

'Glutz needle bearing' version
Standard key or cylinder cut-out door handle set:
Door handle set
With HESO square spindle (8 mm) for door thickness...
Rose base plate with needle bearing guide and support cams for M4 screws
Door handle rosettes and key rosettes with clip-on cover for concealed fixing using lock-tight screws
Brushed satin stainless steel surface
e.g. Item: 5064/5620C Needle bearing / 5380C BB or PZ

Glutz glide easyfix® version
Standard key or cylinder cut-out door handle set:
Door handle set guided fixed mobile
With easyfix®, HESO square spindle (8 mm) for door thickness...
Rose base plate with glide guide and support cams for M4 screws
Door handle rose and key rose with clip-on cover for concealed fixing using lock-tight screws
Brushed satin stainless steel surface
e.g. Item: 5064/5620C glide easyfix® / 5380C BB or PZ

Bathroom door handle set:
Door handle set
With HESO square spindle (8 mm) for door thickness...
Rose base plate with glide guide and support cams for M4 screws
Door handle rose and key rose with clip-on cover for invisible fixing using lock-tight screws
External WC rose with red-green display and slot-head knob, WC inside plate with turn
Brushed satin stainless steel surface
e.g. Item: 5064/5620C glide / 5380 WC

Lever handle set with outside knob:
Set with fixed mounted knob outside and HESO square spindle (8mm) for door thickness...
With lever handle part 8 mm inside.
Rose base plate with glide guide and support cams for M4 screws
Door handle rose and key rose with clip-on cover for concealed fixing using lock-tight screws
Brushed satin stainless steel surface
e.g. Item: 5064/5620C glide / 5827-50/ 5620C/5380C PZ

Glutz glide easyfix® version
Fire tested handle set:
Door handle set guided fixed mobile
With easyfix® fire-rated with MPA admission, HESO square spindle (9 mm) for door thickness...
Rose base plates with glide guide and support cams for M4 screws
Door handle rose and key rose with clip-on cover for concealed fixing using lock-tight screws
Brushed satin stainless steel surface
e.g. Item: 5064/5620C glide easyfix® / 5380C PZ

13.5 Tender texts

Glutz quote texts for stainless steel window hardware

Window handle for tilt and turn windows

Glutz window handles, with clip-on rose 5616CF oval for concealed fastening
Ball stop 4 x 90°, spindle 7 x 32 mm
Rose baseplate with 10 or 12 mm cams
Without fastening materials
Satin stainless steel finish
e.g. Item: 5064/5616CF-32

Window handle metal frame windows:

Glutz window handles, with clip-on rose 5616CF oval for concealed fastening
Ball stop 4 x 90°, spindle 7 x 12/22/24/26 mm
Rose baseplate with 10 or 12 mm cams
Without fastening materials
Satin stainless steel finish
e.g. Item: 5064/5616CF-12/22/24/26

Window handle for metal frame windows with surface-mounted mechanism:

Glutz window handle with mechanism case 8500 for concealed fastening
Catch 4 x 90°, with adapters for ROTO, SCHÜCO, SIEGENlA, WINKHAUS; JANISOL
Without fastening materials
Satin stainless steel finish
e.g. Item: 8500/5064-Roto

13.5 Tender texts

Glutz quote texts for stainless steel pull handles

Glutz pull handles
Satin stainless steel
Shock- and scratchproof, corrosion resistant
For single fixing or back to back fixing
19 mm, 25 mm, 31 mm, 38 mm
Standard lengths up to 600 mm
Art. 5760 straight
Art. 5770 cranked
Art. 5780 half circle
With Glutz fixing 5791
For single fixing

Glutz fixing 5790
For back to back fixing

When ordering, please specify: article number, diameter, centres, fixing

Indications to order

Lever handle

- Article number
- Lever handle square spindle (8, 8.5 or 9 mm)
- Length of square spindle (door thickness)
- Surface
- 16 mm guide for Glutz glide / needle bearing (NL) / easyfix®
- 16 mm guide for Glutz glide / needle bearing (NL) / easyfix®
- Handing (L/R) from cutout
- Application class

Door knobs

- Article number
- Thread M10 or square spindle (8 or 9 mm)
- Surface
- Give handing by eccentric execution

Escutcheons/roses

- Article number
- Guide (Glutz glide/NL/twin)
- Easyfix®
- Cutout
- Distance
- Surface

Window handle

- Article number
- Spindle length
- Surface

Window handle drive

- Article number
- Adapter / System
- Surface

Pull handles

- Article number
- Diameter
- Centres
- Fixing

Hinges

- Article number
- Surface
- Left / right information for STS (GS) types

Locks

- Article number
- Backset
- Follower (8 or 9 mm)
- Closure
- Forend dimensions
- Surface of forend
- Handing (L/R)
- Distance
- Material of forend

Striking plates

- Article number
- Surface
- Handing (L/R)
- Material

Electric strikes

- Article number

Glutz Infoline®

- Article number

Accessories

- Article number

13.7 Standards and quality performances

Handles and security hardware

German standards:

DIN 18255: 1999-09: Architectual ironmongery - Door handles, striking plates and rose
Terms, dimensions, requirements

Is currently under revision due to final draft of DIN EN 1906 and will be retained with dimensions as so-called basic standard for handles.

DIN 18257: 2003-03: Architectual ironmongery - Security hardware
Terms, dimensions, requirements, performance and certification

A new edition of this standard is under work and will contain parts of the new DIN EN 1906

DIN 18273: 1997-12: Door handles for fire rated doors and fire rated door dimensions, requirements and testing

Was re-issued in 1997 and is not affected by DIN EN 1906

European standards:

EN 1906: 1999-07 Locking devices - doors handles and door knobs requirements and test methods

EN 179: 1997-11: Locking devices - emergency exit locks with handles or striking plate
Requirements and test methods.

In Switzerland this standard was published in 1997 under SN EN 179 with SIA No. 343.501. This new European standard does not replace any existing DIN standard

EN 1125: 1997-11: Locking devices and architectual ironmongery - Panic locks with horizontal bar requirements and test methods

In Switzerland this standard was published in 1997 under SN EN 1125 with SIA No. 343.502. Neither does this new European standard replace any existing DIN standard.

Use and interchangeability of handles and protective fittings:

In fire rated and smoke resistant doors:

Door handles to DIN 18273, products are interchangeable

In doors to DIN ENV 1627, applied in prevention of burglary:

- Security hardware to DIN 18257 - ES 1 to resistance classes 1 and 2
- Security hardware to DIN 18257 - ES 2 to resistance class 3
- Security hardware to DIN 18257 - ES 3 to resistance class 4

Products are interchangeable in the above-mentioned resistance classes 1 to 4.

13.7 Standards and quality performances

Door handle sets - Glutz Professional line

Design:
The following versions of Glutz door handle sets are tested: long plates (screw-on type), short plates, circular or oval roses with lever handle, and clip-on escutcheons in stainless steel.
Escutcheon base plates in galvanised steel, fixed with M4 screws.
An option, with door handle square spindle in galvanised steel or stainless steel 8, 8.5, 9, 9 splitl and 10mm.
Loose or fixed mobile bearing with needle or glide bearing in single or twin version.

Classification code in acc. with EN 1906: 2002-05

	User-category	Durability	Door measurements	Fire restistant	Security	Corrosion resistance	Security against burglary	Version
Loose mobile Galvanised steel	3	7	-	0 [1)]	0	3	0	U
Fixed mobile Galvanised steel	3	7	-	0 [1)]	1 [2)]	3	0	U
Loose mobile Stainless steel	4	7	-	0 [1)]	0	4	0	U
Fixed mobile Stainless steel	4	7	-	0 [1)]	1 [2)]	4	0	U

Category of use

Grade 3: High frequency of use by public or others with little incentive to exercise care and with a high chance of misuse, e.g. public office doors.
Grade 4: High frequency of use on doors which are subject to frequent violent usage, e.g. football stadiums, offshore installations (oil rigs), barracks, public toilets, etc.

Durability

Grade 7: Frequent use: 200,000 test cycles

Fire resistance

[1)] EN 1906 : 2002-05 is not a harmonised standard. Until EN 1906 is harmonised with any likely CE identification, instead of the fire resistance classification, test certificates applicable under DIN 18273 for suitability for fire-rated and smoke-resistant doors shall be conclusive. These test certificates have been obtained and are valid for 'Professional' line.

Security / Security against burglary

[2)]Door handle sets in fixed mobile version which have passed optional supplementary testing for a tensile load of 2500N, are designated security hardware for more demanding requirements. They should not be confused with protective hardware which is classified under security against burglary in grades 1 - 4.

13.7 Standards and quality performances

Door handle sets - Glutz Professional line

Resistance to corrosion

Grade 3: 96h Salt spray test
Grade 4: 240h Salt spray test

Version

Type U: Door handle sets without handle return spring

Certificate of conformity

- Door handle sets for fire-rated and smoke protection doors are required as a sub-assembly to conform to the design standards set out under DIN 18273. This standard also specifies legal requirements for mechanical robustness and for long-term functional testing.
- All the door handle sets shown in the Glutz Professional line in this catalogue meet the requirements of DIN 18273.
- The quality of our products is monitored in accordance with the specifications set out in civil engineering regulations A (6.17). Our products are currently covered by a valid monitoring certificate and by the general civil engineering supervisory certificate issued by the MPA in Dortmund, bearing control reference number: 12 9882-DO 20.21.

Our certified products are monitored by the regional material testing authority of NRW.

Certificate of conformity regarding the use of Glutz door handle sets for fire-rated and smoke-protection doors

Register according to product name

A
Assoluto 149, 221
Athens 30

B
Baar 58
Baden 51
Banks 47, 216
Berlin 35, 206
Berne 45, 214
Biel 31, 204
Bruges 32

C
Cape Town 57, 225

D
Durban 67

E
Elite Basle 260
Emerald 54, 222
Extra narrow 181

F
Florence 24, 198
For panic exit devices 254, 256
For panic exit devices EN 1125 ..... 253, 255

G
Garbsen 43, 212
George 56, 224
Greyville 153

H
Hamburg 152
Hannover 44, 213
Helena 48
Helsinki 60, 226

I
INOX Basle 52, 65, 219

J
Jackson 38, 209

L
Linz 66
Lockable 230–231
Lucerne 26, 200
Lugano 25, 199

M
Malmö 34
Memphis 46, 148, 215
Mercury 27, 201
München 55, 150, 223

N
New Orleans 39, 210

O
Olten 59
Oslo 40, 146, 211

P
Paris 28, 202
Piraeus 29, 203
Prestige Ascona 262–263
Prestige Basle 259, 261
Pushbar 257

R
Rena 41

S
Saarbrücken 151
Sapphire 49, 76, 117, 218
Savannah 42, 147
Spring assisted 161, 165
Spring loaded left or right 162, 166
Stella 64
Stockholm 62

T
Thun 36, 207
Tulln 50, 217
Turku 63

U
Uppsala 33, 205

V
Vicenza I 21
Vicenza II 22
Vicenza III 61
Vicenza IV 196
Vienna 23, 197

W
Westridge 70
With cover 229

Z
Zug 37, 208
Zurich 53, 220

Register according to product number

50100 ... 71
5030 ... 21
5031/5616 CF ... 196
5032-280/5619K ... 232
5033 ... 22
5036 ... 23
5036/5616 CF ... 197
5036-220/5619K ... 233
5037 ... 24
5037/5616 CF ... 198
5038 ... 25
5038/5616 CF ... 199
5039 ... 26
5039/5616 CF ... 200
5040 ... 27
5040/5616 CF ... 201
5046 ... 28
5046/5616 CF ... 202
5050 ... 29
5050/5616 CF ... 203
5051 ... 30
5052 ... 31
5052/5616 CF ... 204
5053 ... 32
5054 ... 33
5054/5616 CF ... 205
5055 ... 34
5056 ... 35
5056/5616 CF ... 206
5057 ... 36
5057/5616 CF ... 207
5057-280/5613 ... 234
5057-280/5619K ... 235
5059 ... 146
5060 ... 37
5060/5616 CF ... 208
5061 ... 38
5061/5616 CF ... 209
5062 ... 39
5062/5616 CF ... 210
5064 ... 40
5064A/5616 CF ... 211
5065 ... 41
5066 ... 42
50661 ... 147
5067 ... 259
5067/5616 CF ... 261
5068 ... 43
5068/5616 CF ... 212
5069 ... 44
5069/5616 CF ... 213
5070 ... 45
5070/5616 CF ... 214
5071 ... 46
5071/5616 CF ... 215
5071-280/5613 ... 236
5071-280/5619K ... 237
5072 ... 148
5073 ... 47
5073/5616 CF ... 216
5076 ... 48
5080 ... 49
5083 ... 50
5083/5616 CF ... 217
5084 ... 51
5085/5616 CF ... 218
5087 ... 52
5087/5616 CF ... 219
5088 ... 53
5088/5616 CF ... 220
5089 ... 149
5089/5616 CF ... 221
5090 ... 54
5091/5616 CF ... 222
5092 ... 55
5092/5616 CF ... 223
50921 ... 150
5093 ... 56
5093/5616 CF ... 224
5094 ... 57
5094/5616 CF ... 225
5095 ... 262
5095/5616 CF ... 263
5096 ... 58
5098 ... 59
5099 ... 60
5099/5616 CF ... 226
51100 ... 72
5130 ... 61
5154 ... 62
5155 ... 63
5155-280/5613 ... 238
5155-280/5619K ... 239
5162 ... 64
5175 ... 151
5176 ... 152
52100 ... 73
5267 ... 260
5287 ... 65
5310C ... 164
5311 ... 169
5315 ... 170
5316 ... 171
5317 ... 172
5322C ... 90
5323C ... 92
5324C ... 94
5325S ... 101
5326S ... 102
5330.2S-RS ... 133
5330.2S-ZA ... 134
5330.3S-ZA ... 135
5330S ... 132
5335C ... 103
5341 ... 105
5341S ... 106
5345 ... 107
5345-30 ... 179
5345E ... 109
5345S ... 108
5347C ... 110
5348C ... 111
5349C ... 115
5350C ... 116
5359 ... 180
5360 ... 181
5361 ... 182
5362C ... 256
5363C ... 192
5364C ... 183
5369 ... 112
5369S ... 113
5370 ... 120
5371 ... 121
5372C ... 122
5374 ... 119
5375 ... 123
5380C ... 86
5381 ... 88
5387 ... 96
5388 ... 98
5390C ... 117
5392 ... 174
5394 ... 176
5396C ... 178
5420 ... 137
5430 ... 136
5439.2-ZA ... 140
5439.3-ZA ... 141
5444 ... 114
5465 ... 142
5466 ... 143
5472 ... 185
5473 ... 186
5474 ... 187
5476 ... 188
5477 ... 189
5478 ... 190
5479 ... 191
5608C ... 161
5609C ... 162
5610C ... 163
5612 ... 173
5615 ... 175
5616 DC ... 228
5616 DCV ... 229
5617 A ... 230
5617 DC ... 231
5618C ... 177
5620C ... 85
5621 ... 87
5622C ... 89
5623C ... 91
5624C ... 93
5627 ... 95
5628 ... 97
5630S ... 131
5715 ... 68
5715/5616 CF ... 227
5750/5751 ... 245
5760/5761 ... 246
5765/5766 ... 247
5770/5771 ... 248
5780/5781 ... 249
5785/5786 ... 250
5825 ... 74
5825E ... 154
5827 ... 75
5830 ... 155
5835 ... 76
5836 ... 77
5837 ... 78

Register according to product number

5838 156
5839 157
5840 158
5841 159
5842 79
5843 80
5945.0 125
5945A 126
5946 127
5950 128
6012 66
6016 67
6016-280/6143 240
6030 69
6031 70
6032 153
6120 118
6140 99
6141 100
6142C 165
6143C 166
6144C 167
6145C 168
6147C 104
6150 138
6155 139
6500 124
8500 241
8500 DC 242
8614 253
8615 255
8616 257
8621 254

Glutz AG
Segetzstrasse 13, 4502 Solothurn, Schweiz
Tel. +41 32 625 65 20, Fax +41 32 625 65 35
info@glutz.com, www.glutz.com

Glutz Deutschland GmbH
Schmalenhofer Strasse 61, 42551 Velbert, Deutschland
Tel. +49 2051 8013 51-0, Fax +49 2051 8013 51-15
info-de@glutz.com, www.glutz.com

Glutz GmbH Österreich
St. Oswalder Strasse 5c, 4293 Gutau, Österreich
Tel. +43 7946 20506, Fax +43 7946 20506-10
info-at@glutz.com, www.glutz.com

Glutz UK Ltd.
11 Finch Drive, Springwood Industrial Estate
Braintree CM7 2SF, United Kingdom
Tel. +44 1376 348 808, Fax +44 1376 348 848
info-uk@glutz.com, www.glutz.com

V0719