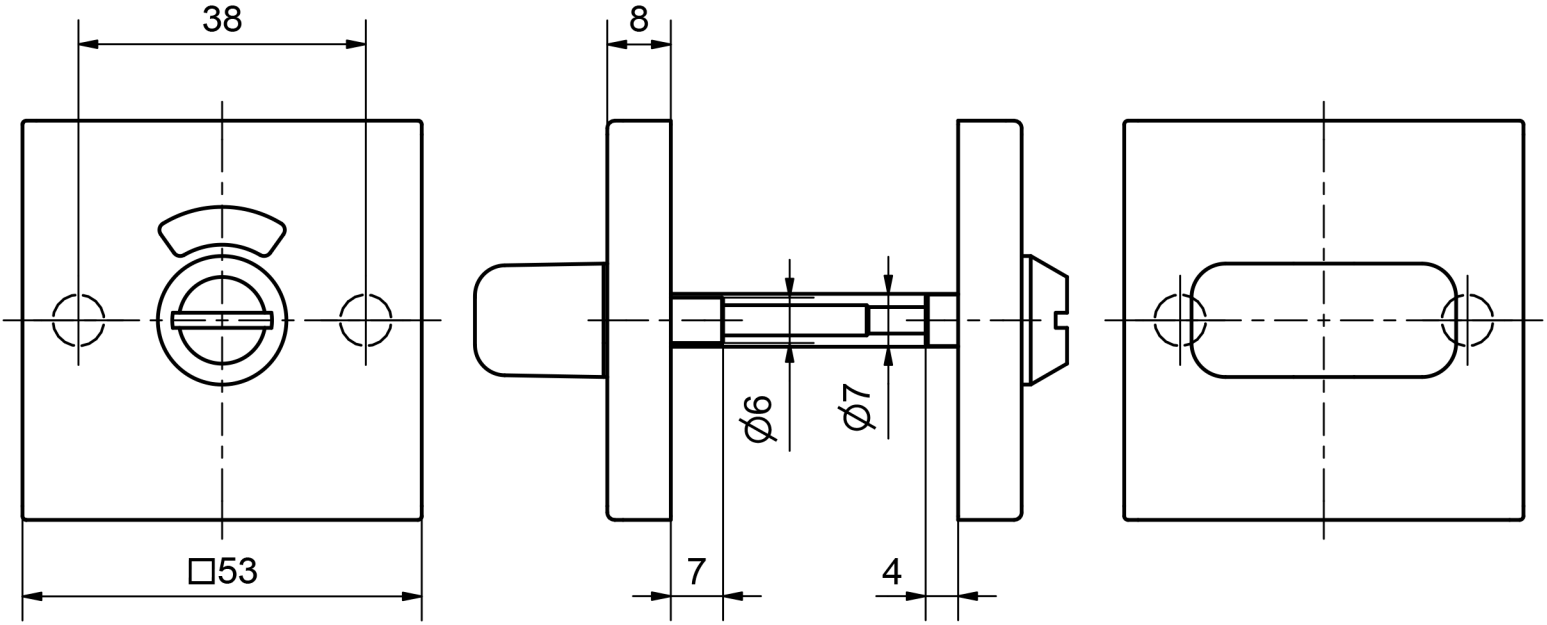

5322C WC - Professional VB Schliessrosette

Massbild