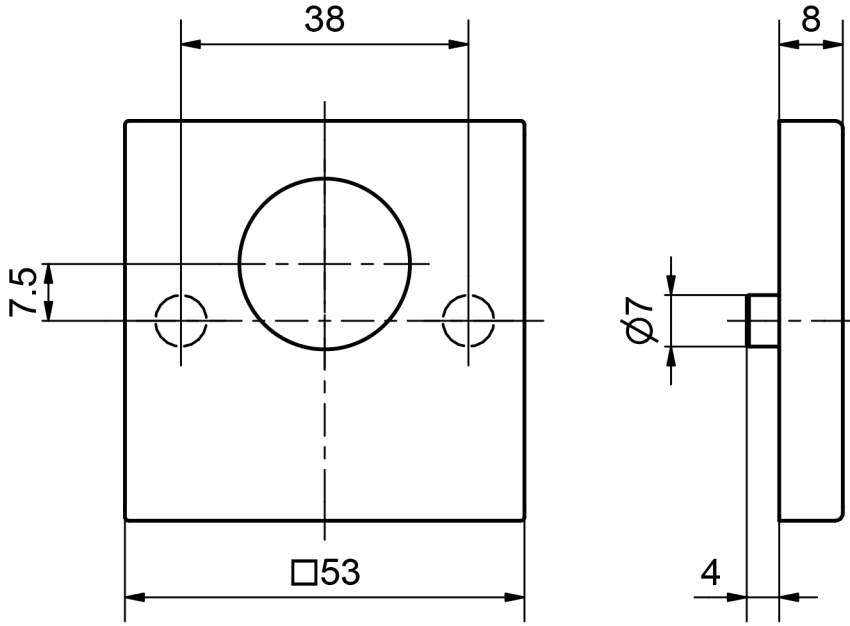

5322C RZ - Professional VB Schliessrosette

Massbild