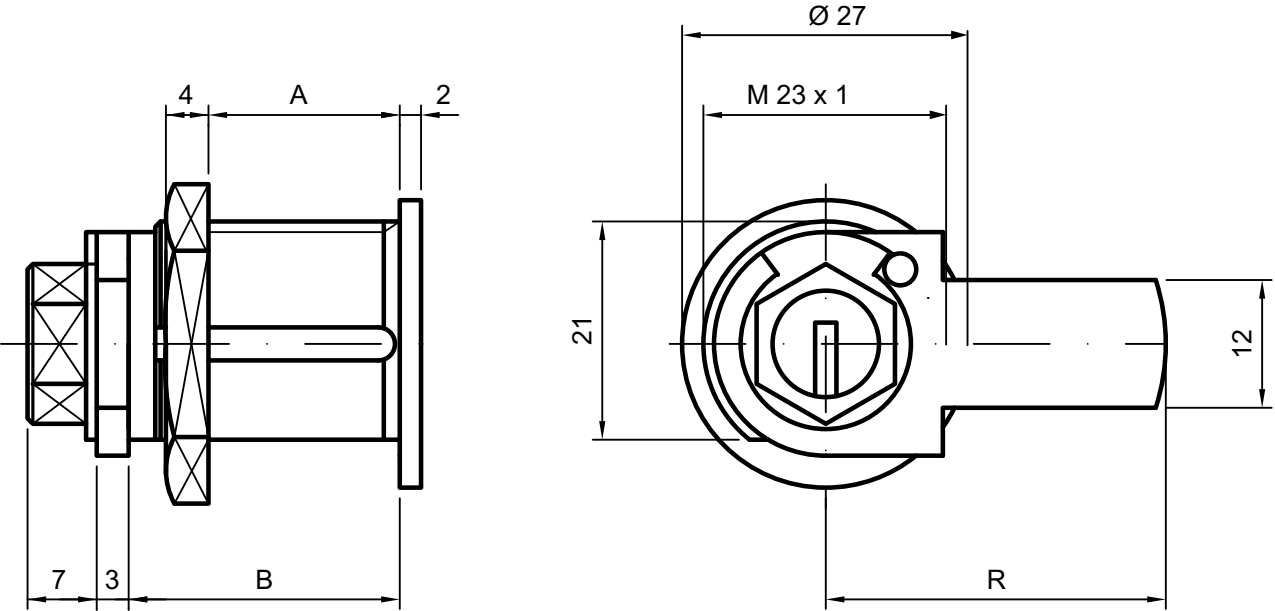
4
A
2
7
3
B
Ø 27
M 23 x 1
21
12
R