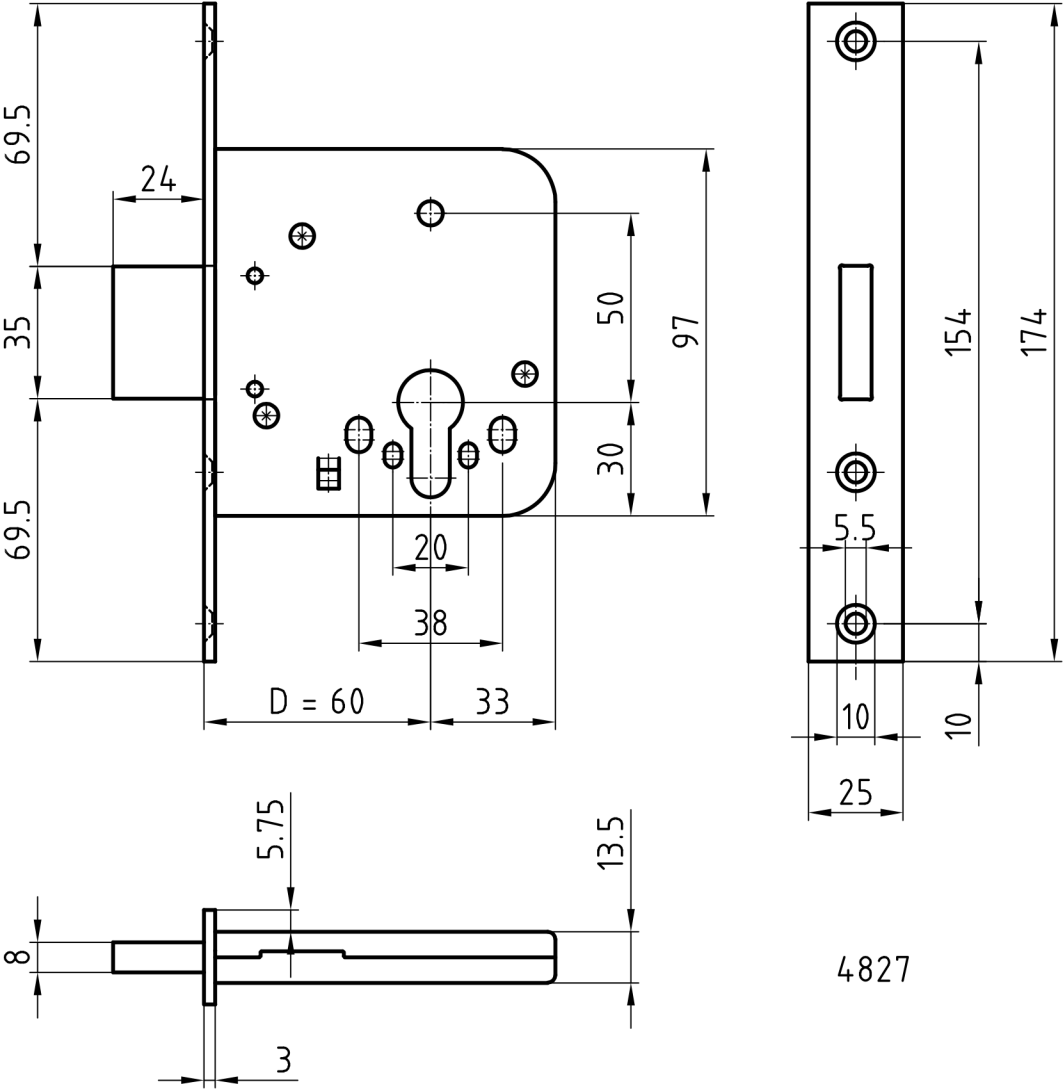
69.5
24
35
69.5
50
97
30
20
38
D = 60
33
154
174
5.5
10
10
25
5.75
13.5
8
3
4827