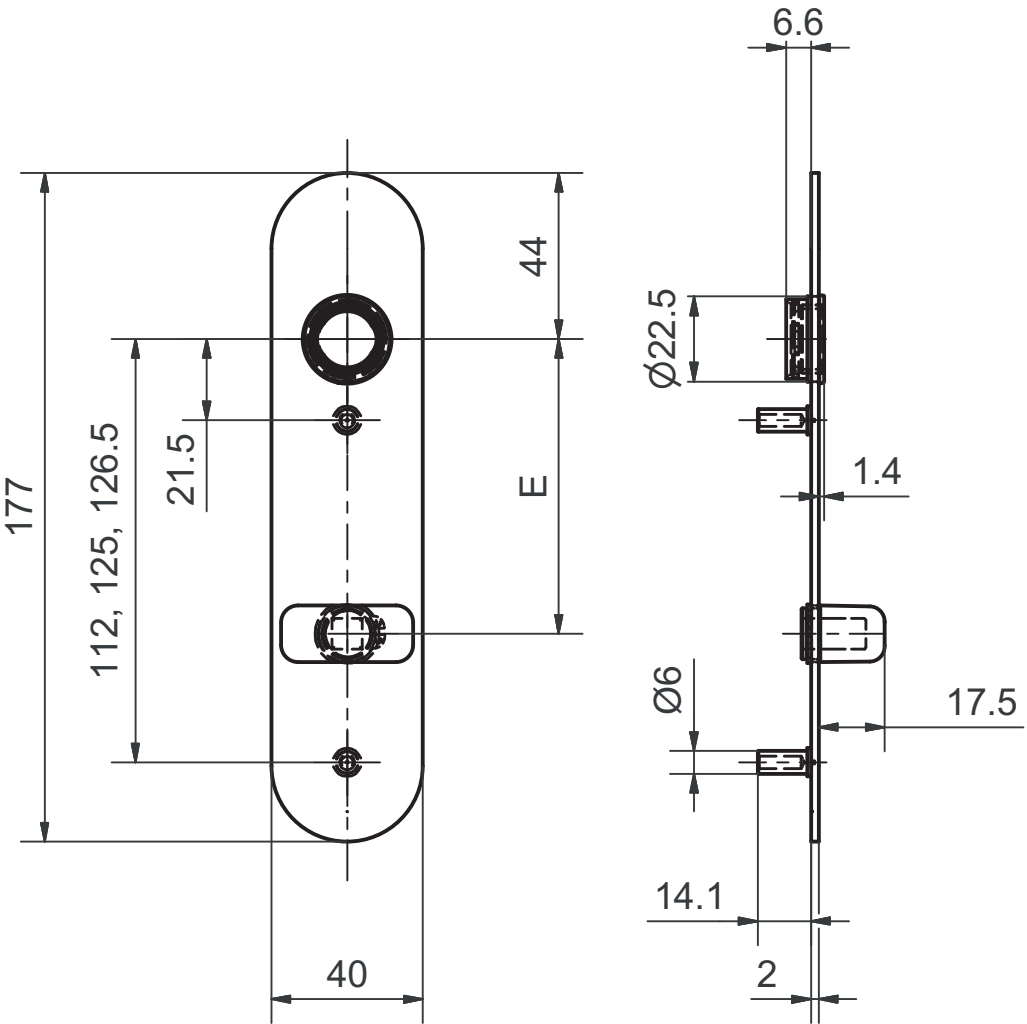
6.6
44
Ø22.5
177
112, 125, 126.5
21.5
E
1.4
Ø6
17.5
14.1
40
2