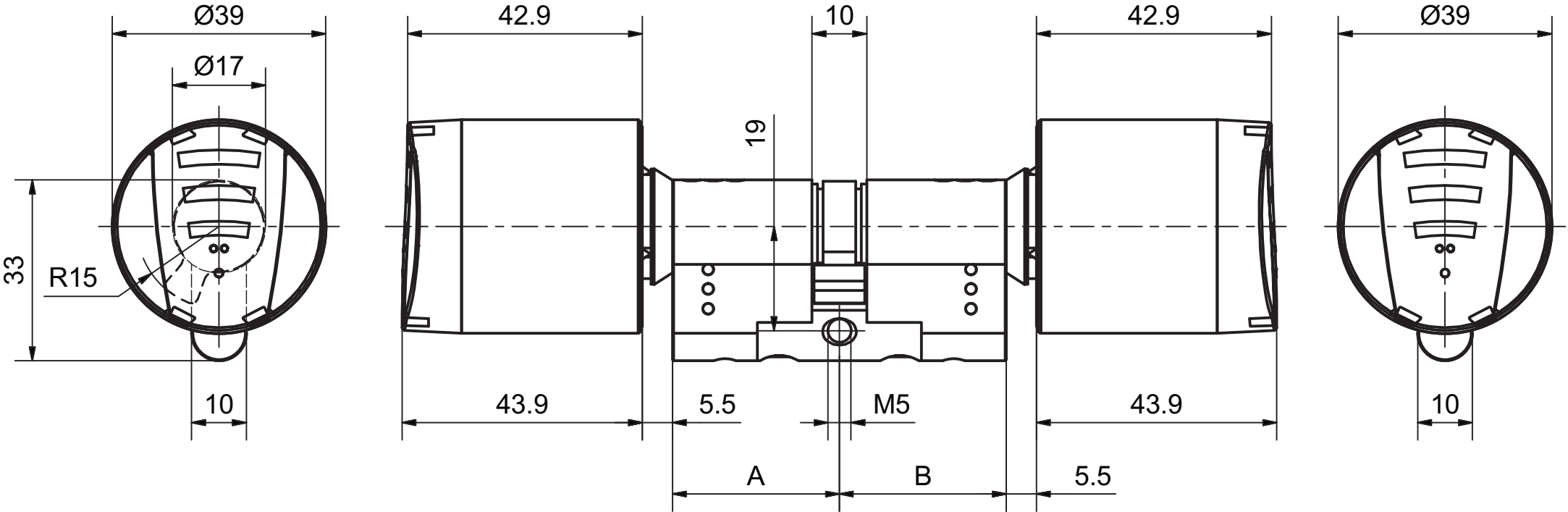
Ø39
Ø17
33
R15
10
42.9
10
42.9
Ø39
19
43.9
5.5
M5
43.9
10
A
B
5.5