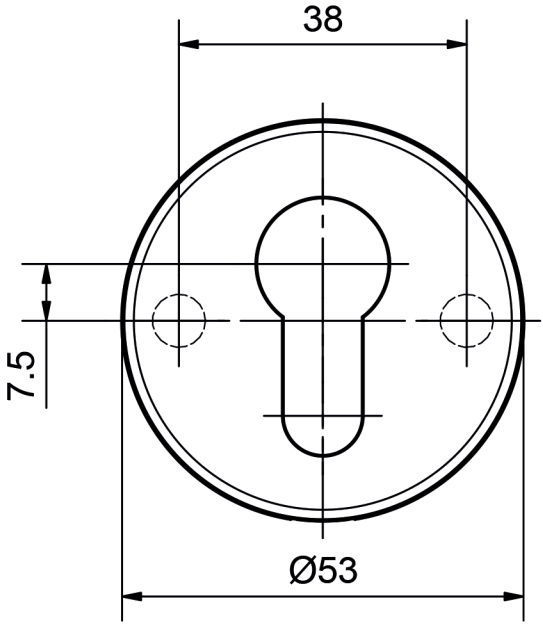


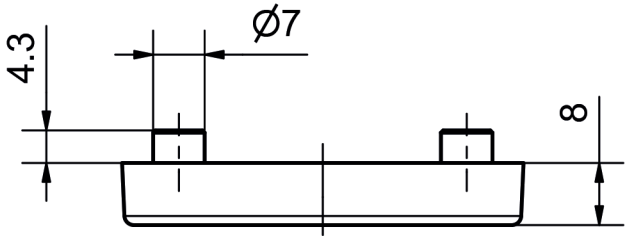


**5380C PZ**