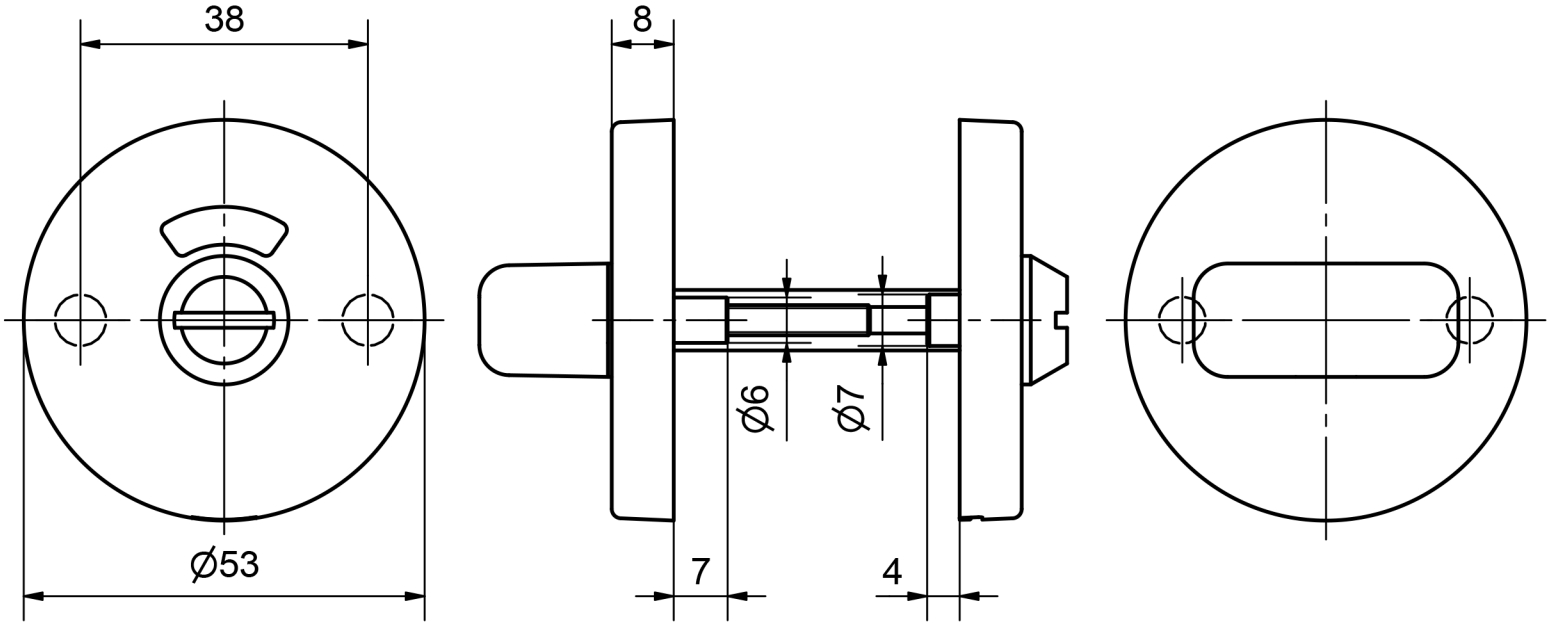

5380C WC - Professional VB Schliessrosette

Massbild