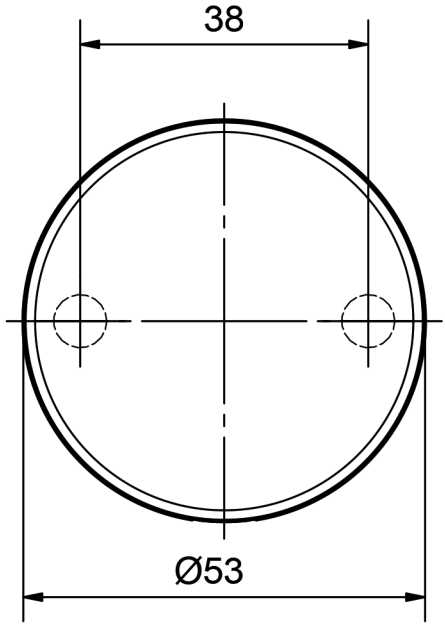

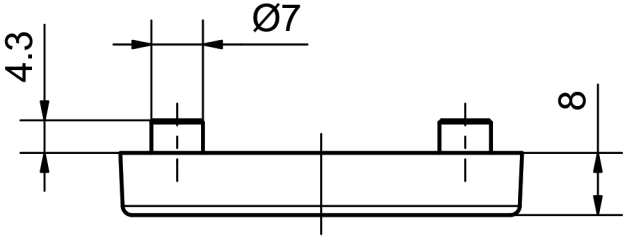

5380C blind