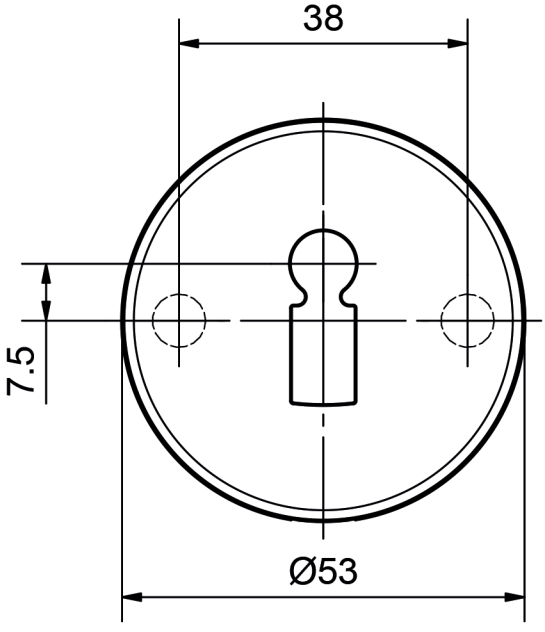

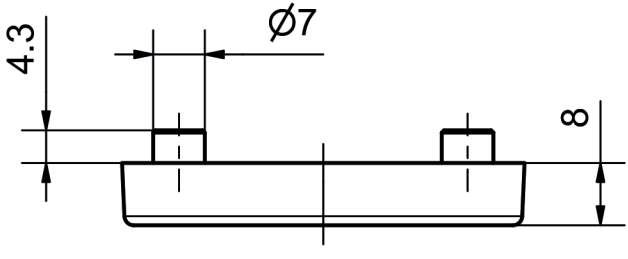

5380C BB