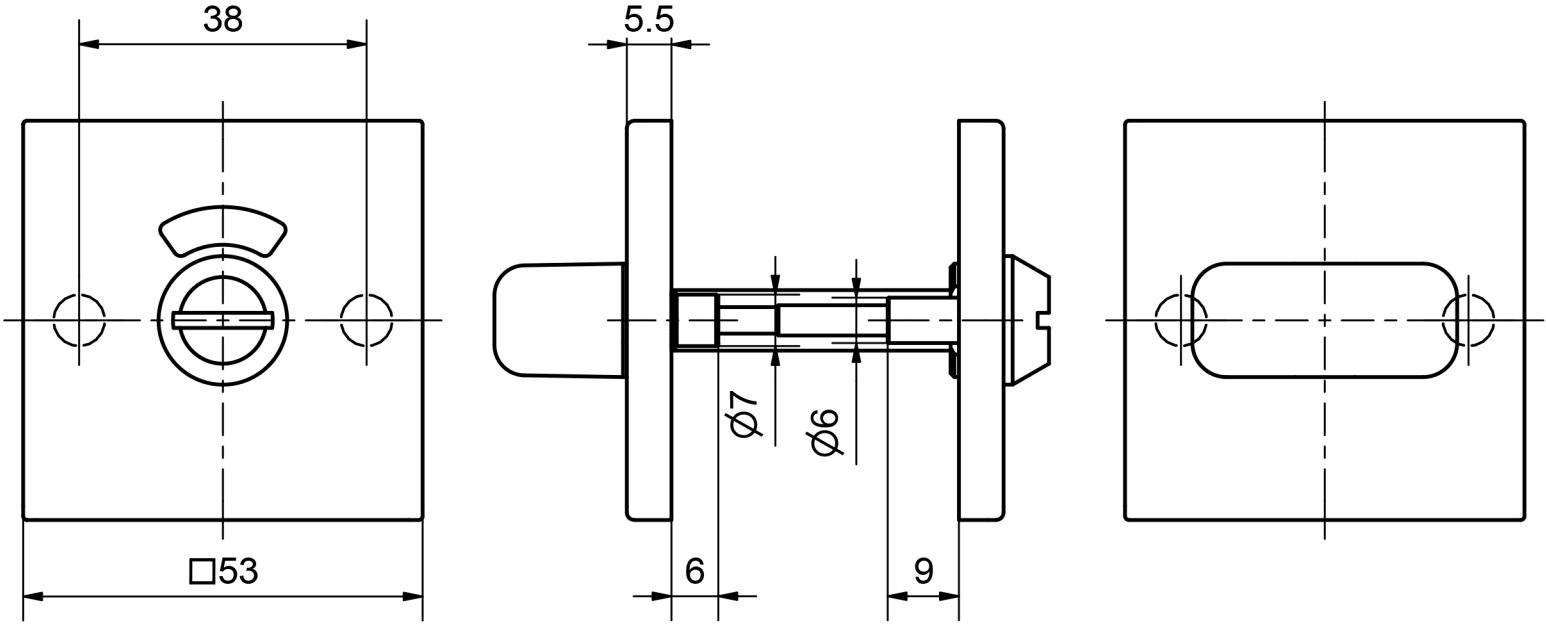

5323C WC - Professional VB Schliessrosette

Massbild