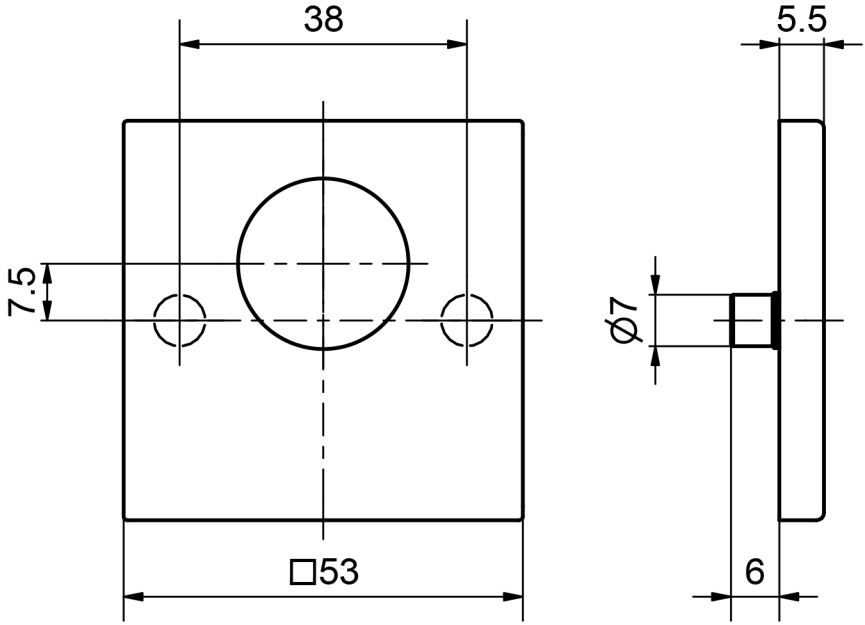

5323C RZ - Professional VB Schliessrosette

Massbild