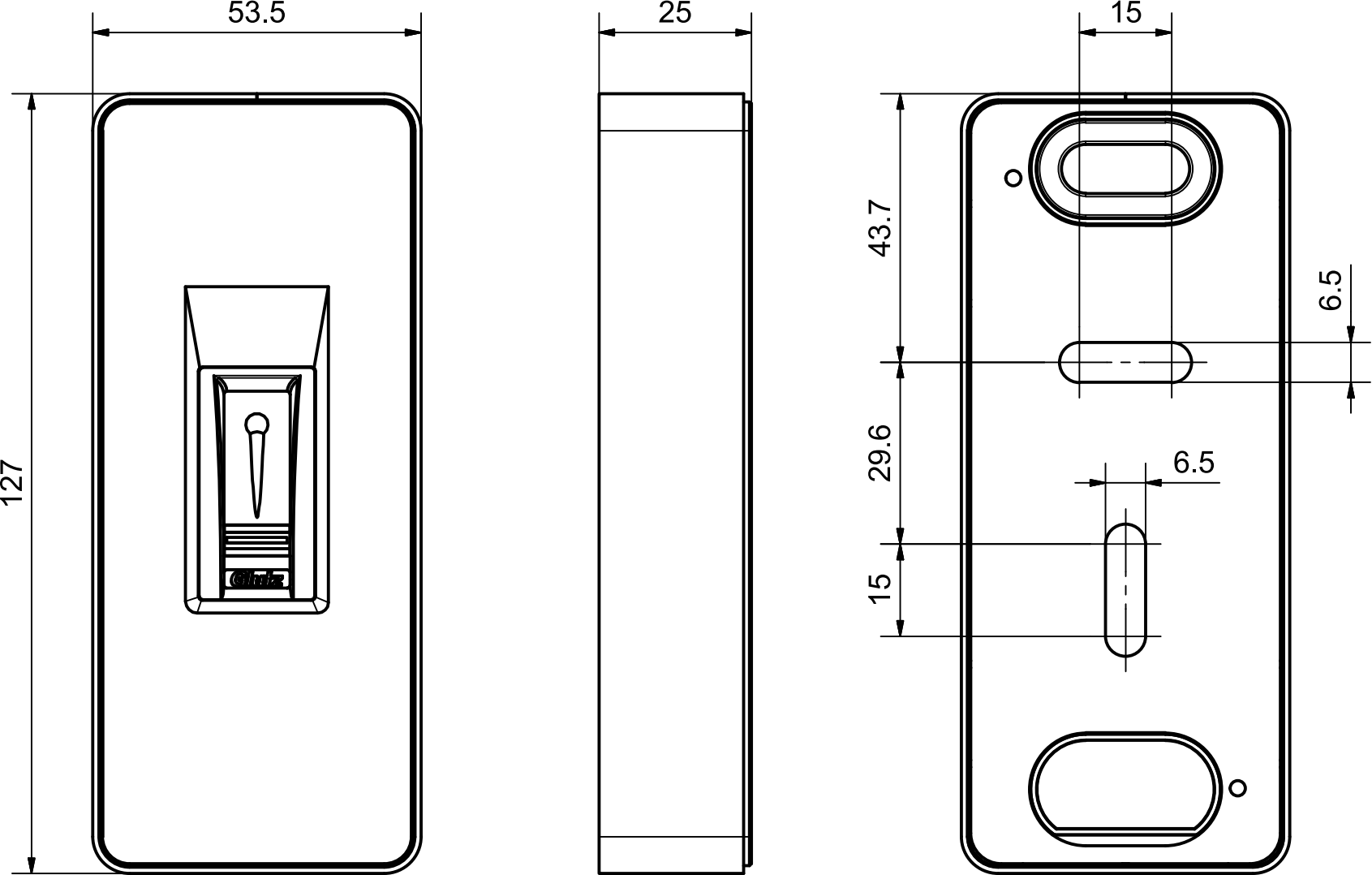
53.5
127
25
15
43.7
6.5
29.6
6.5
15