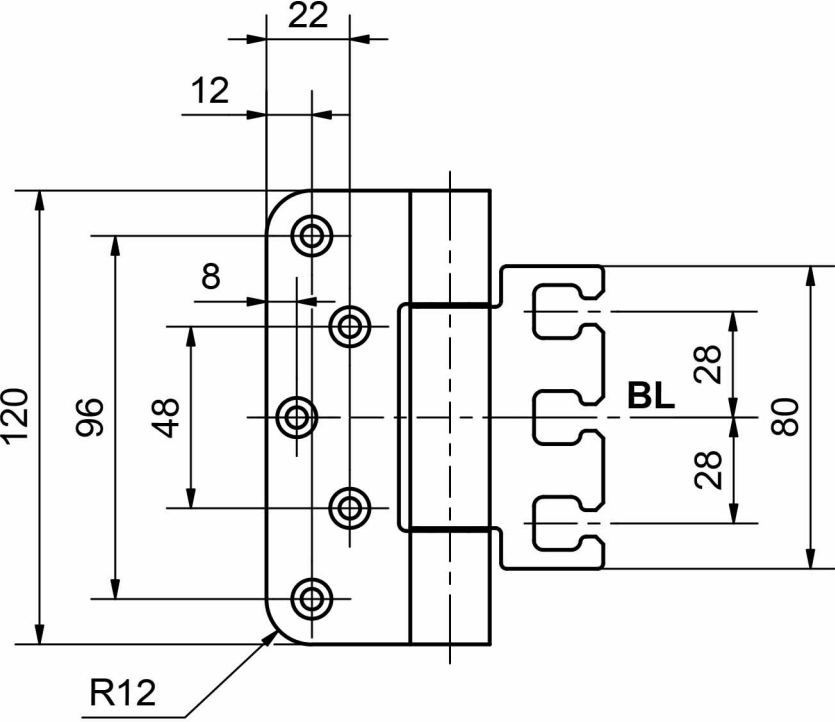
22
12
8
120
96
48
28
BL
80
28
R12

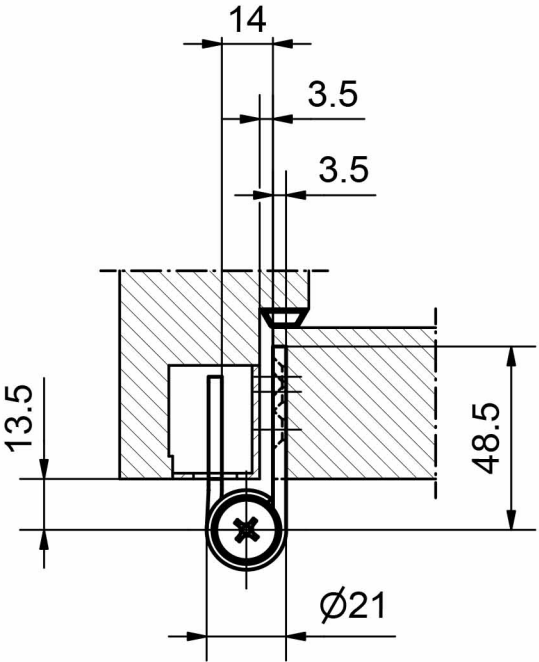
14
3.5
3.5
13.5
48.5
Ø21