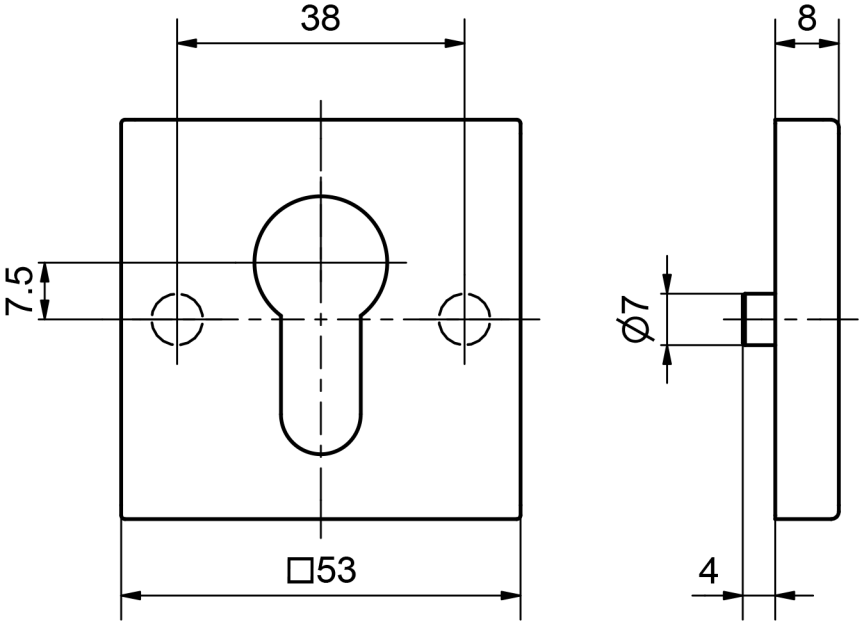

5322C PZ - Professional VB Schliessrosette

Massbild