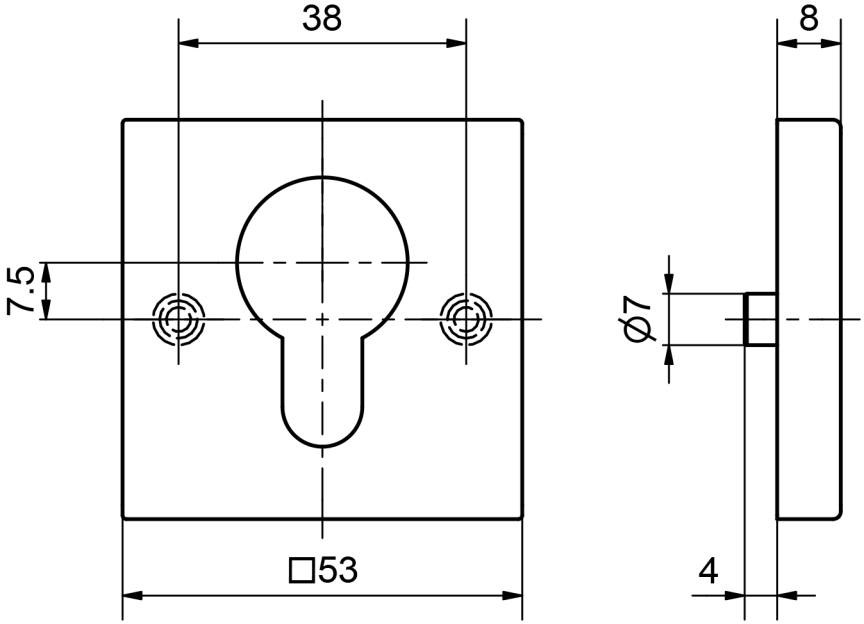

5322C PRZ - Professional VB Schliessrosette

Massbild