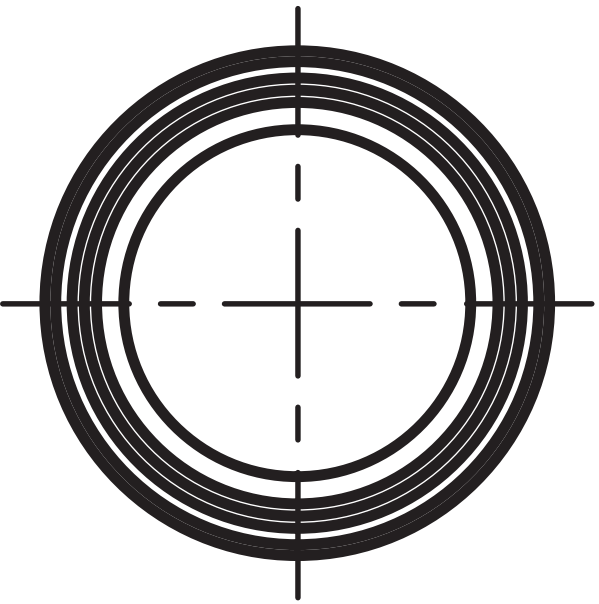

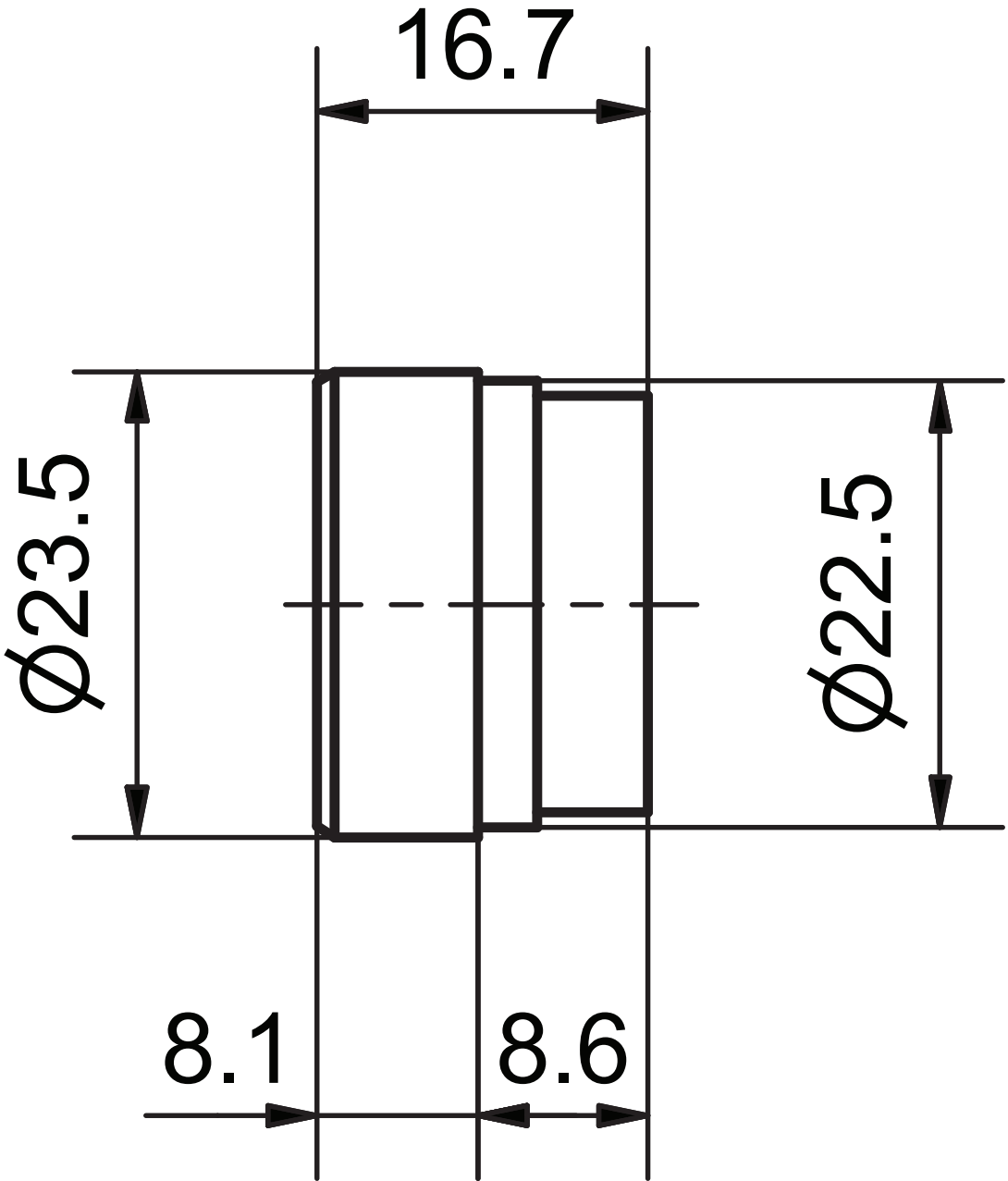
16.7
Ø23.5
Ø22.5
8.1
8.6