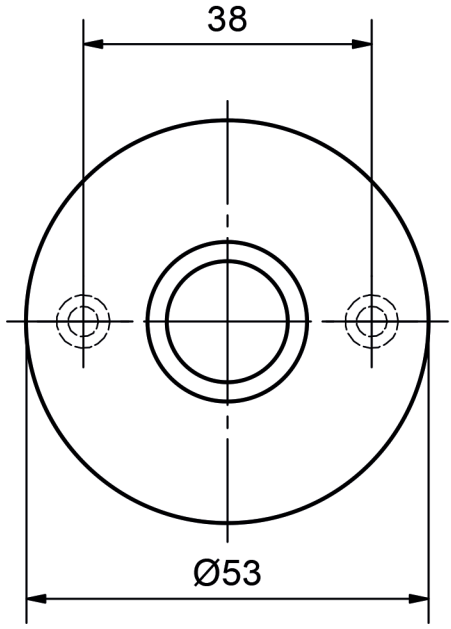

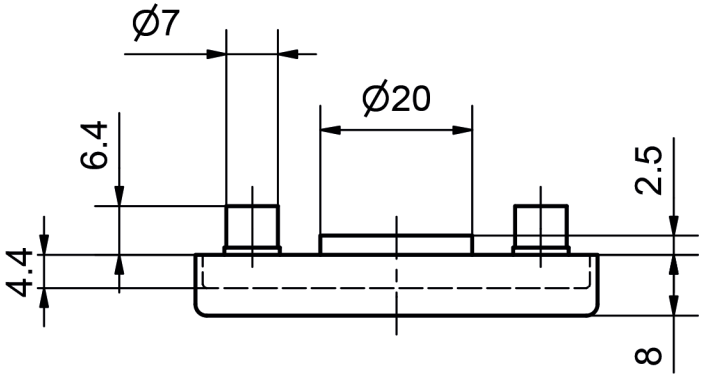

5620C glide