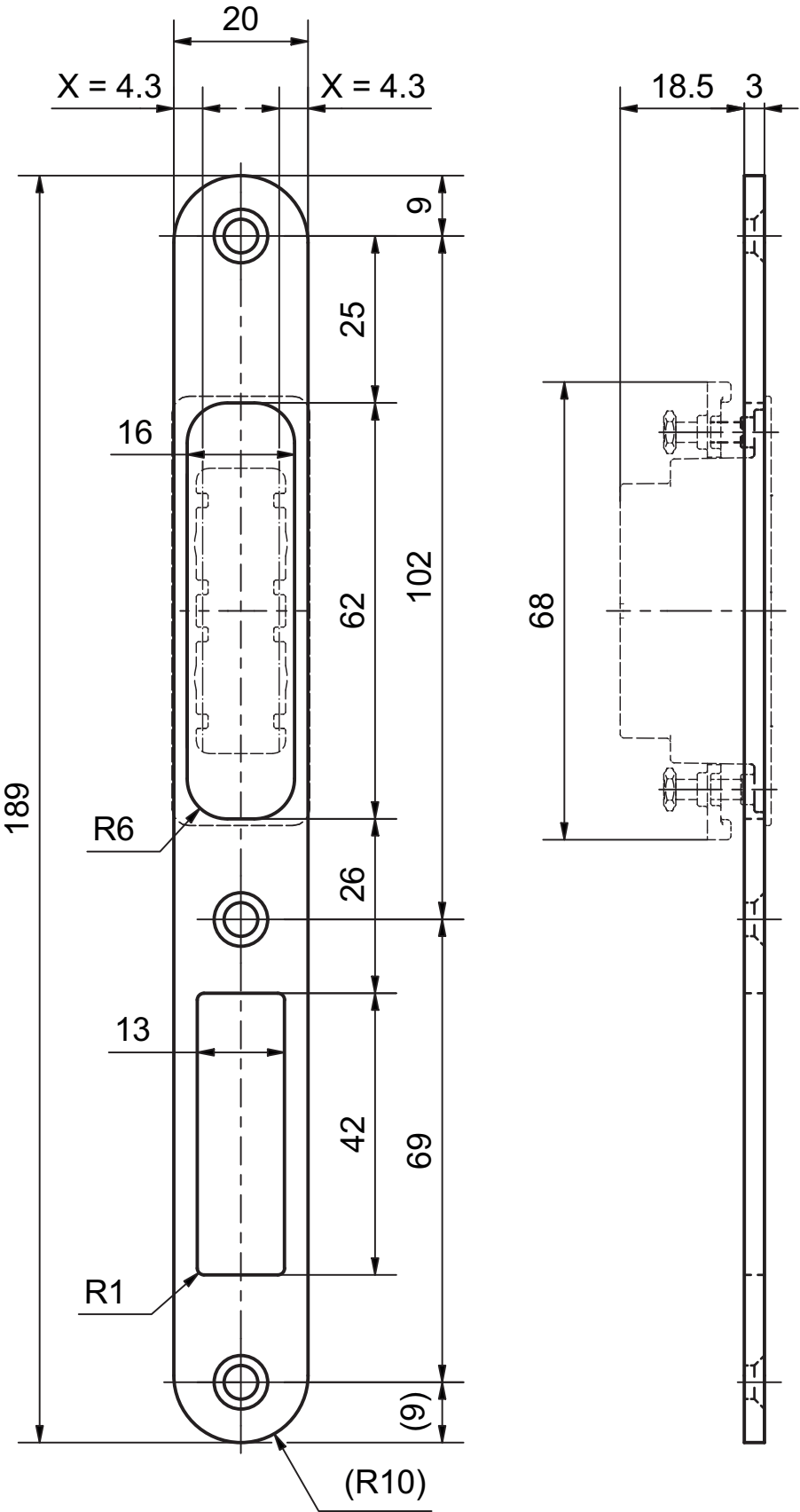
20
X = 4.3
X = 4.3
18.5
3
9
25
16
102
62
68
189
R6
26
13
42
69
R1
(9)
(R10)