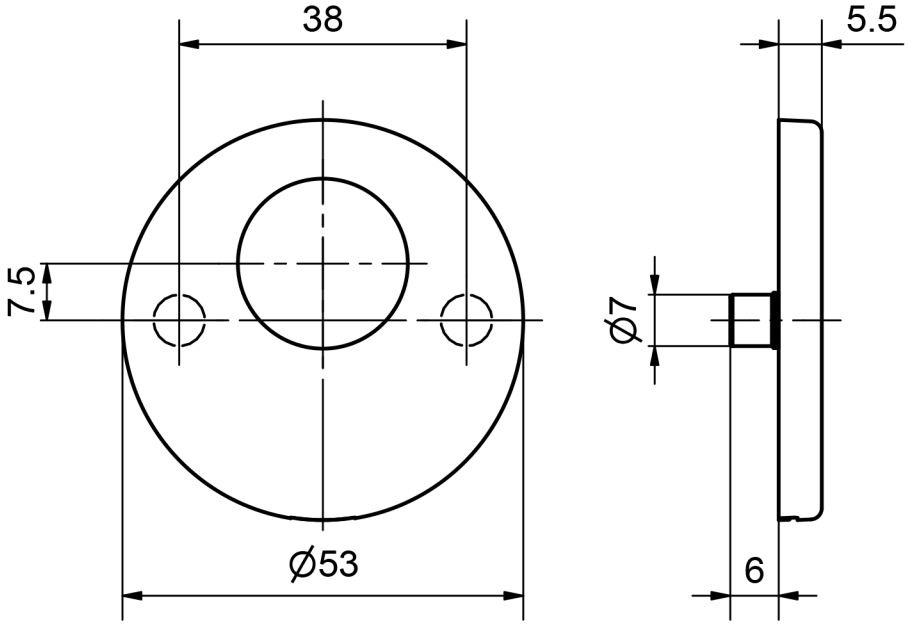

5324C RZ - Professional VB Schliessrosette

Massbild