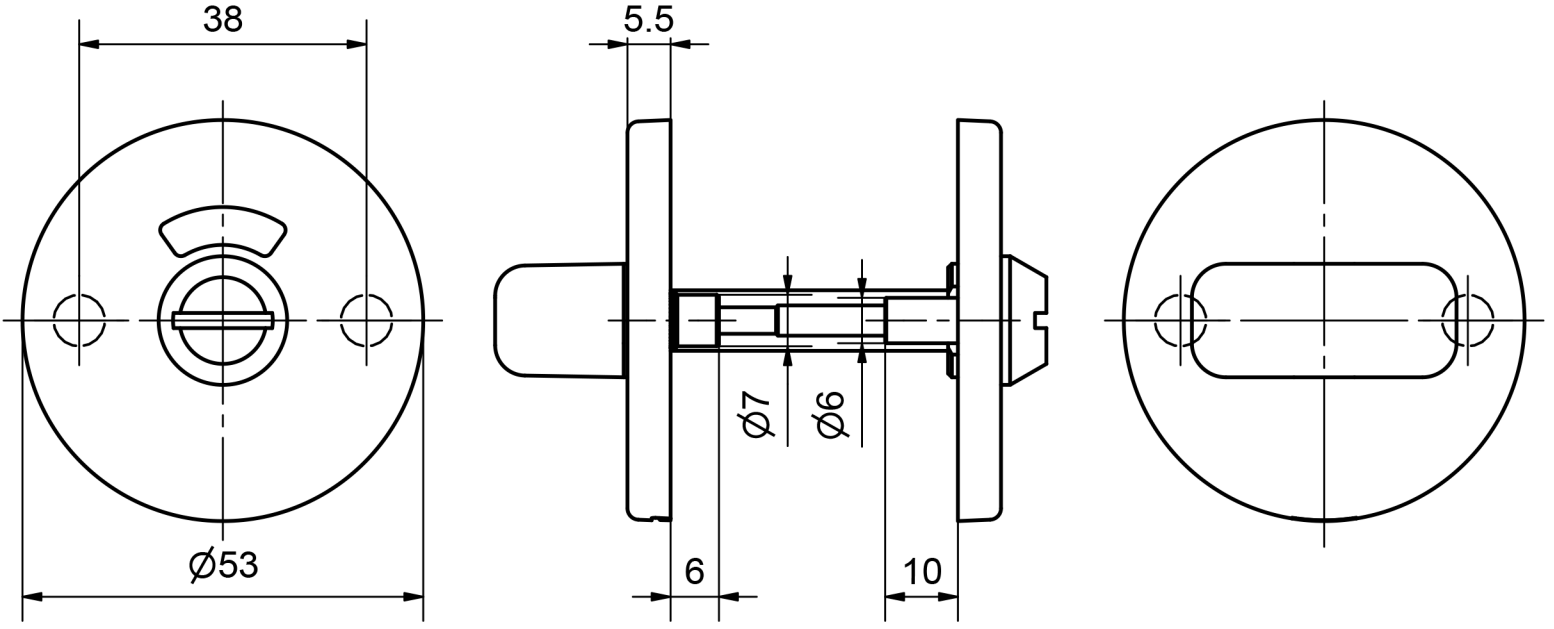

5324C WC - Professional VB Schliessrosette

Massbild