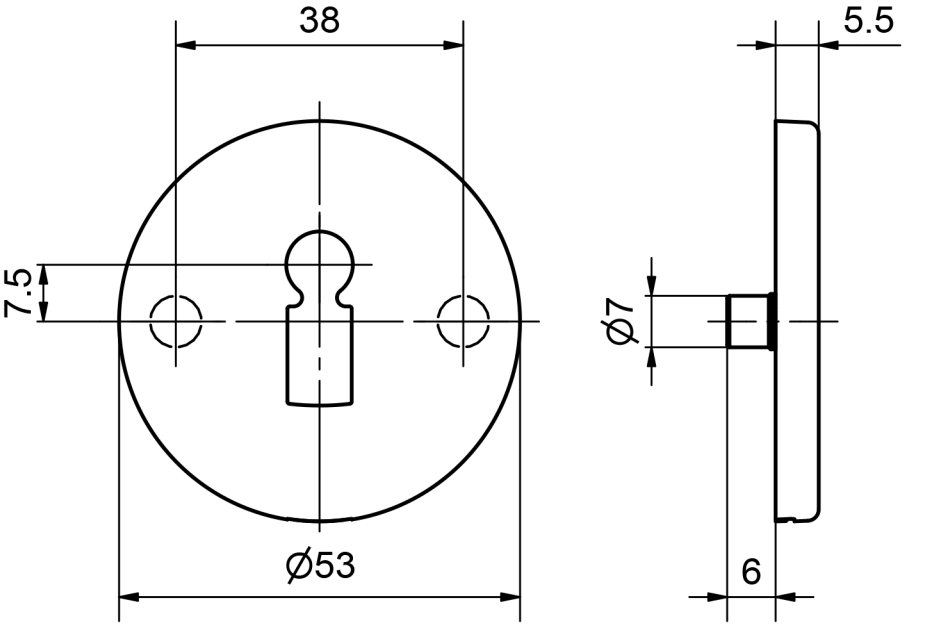

5324C BB - Professional VB Schliessrosette

Massbild