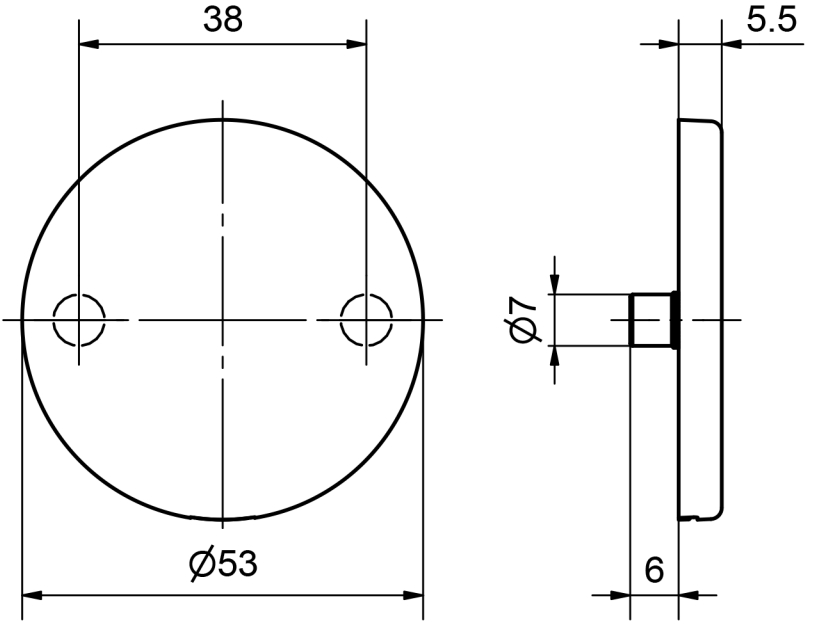

5324C blind - Professional VB Schliessrosette

Massbild