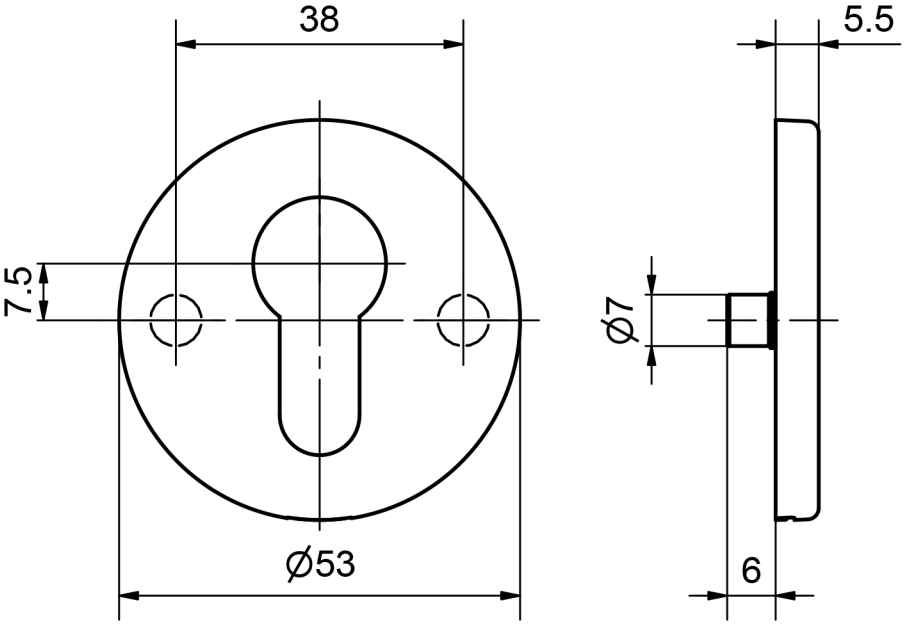

5324C PZ - Professional VB Schliessrosette

Massbild