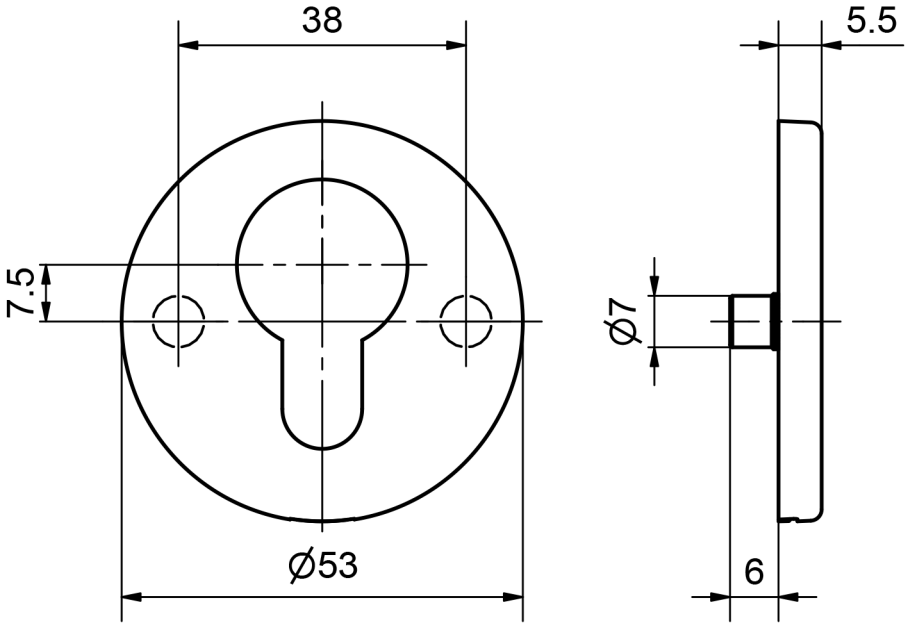

5324C PRZ - Professional VB Schliessrosette

Massbild